Lecture 17: Virtual Memory

Professor G. Sandoval

Some slides adapted by G. Sandoval for CS3224, from Tanenbaum & Bo, Modern Operating Systems:4th ed., (c) 2013 Prentice-Hall, Inc. All rights reserved.
Also some Slides by Brendan Dolan-Gavitt

- Virtual Memory
- XV6 Implementation
- Page Replacement Algorithms

When poll is active, respond at **pollev.com/gsandoval**

I have filled out my course evaluation

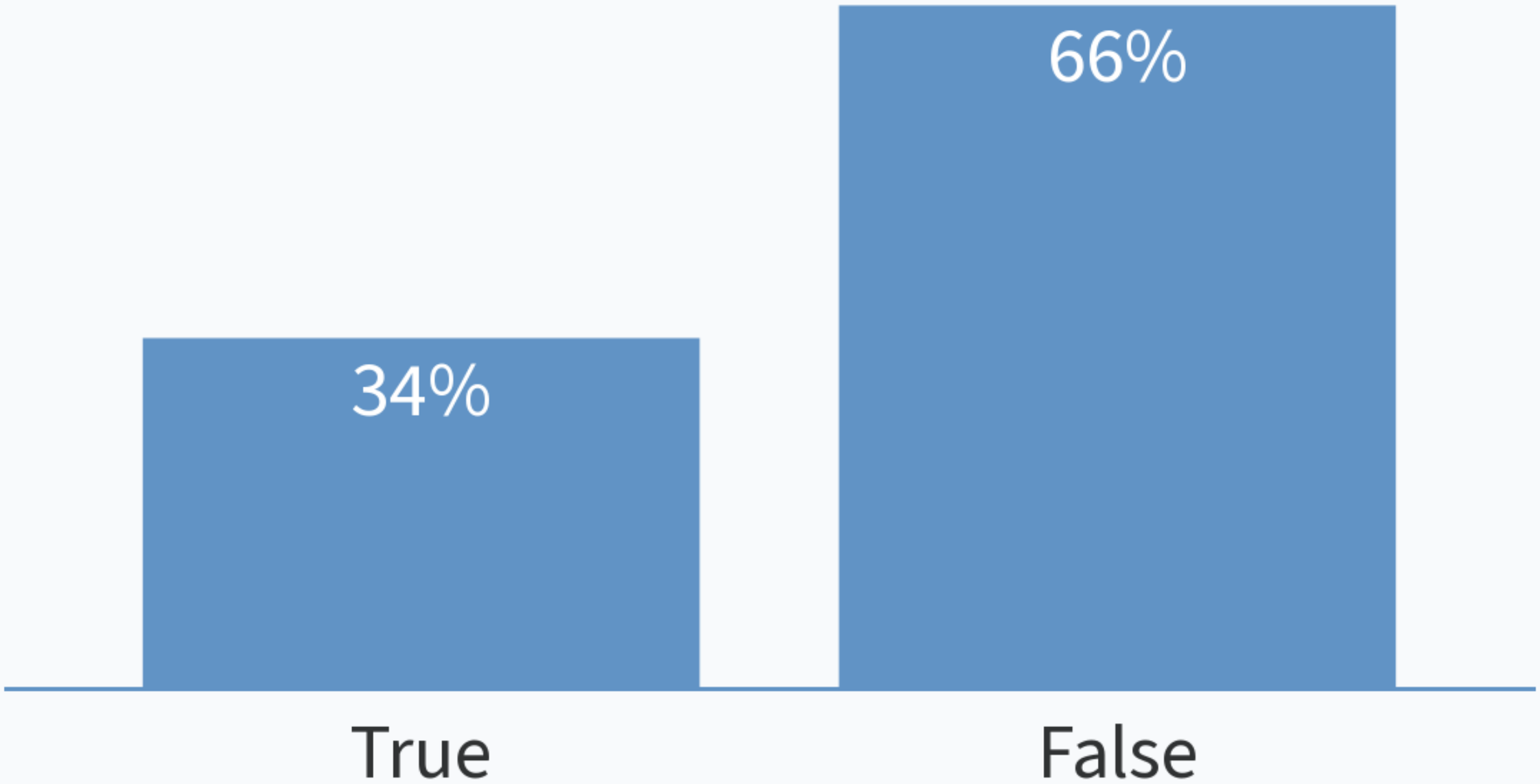

Powered by Poll Everywhere

Start the presentation to see live content. For screen share software, share the entire screen. Get help at **pollev.com/app**

I have filled out my course evaluation 4/26 Version...

True

False

Powered by Poll Everywhere

Start the presentation to see live content. For screen share software, share the entire screen. Get help at **pollev.com/app**

I have filled out my course evaluation 4/28 Version...

True

False

Powered by Poll Everywhere

Start the presentation to see live content. For screen share software, share the entire screen. Get help at **pollev.com/app**

```
void func() {
    int x = 3000; // thanks, Perry.
    x = x + 3;    // this is the line of code we are interested in
```

The compiler turns this line of code into assembly, which might look something like this (in x86 assembly). Use `objdump` on Linux or `otool` on a Mac to disassemble it:

```
128: movl 0x0(%ebx), %eax     ;load 0+ebx into eax
132: addl $0x03, %eax         ;add 3 to eax register
135: movl %eax, 0x0(%ebx)     ;store eax back to mem
```

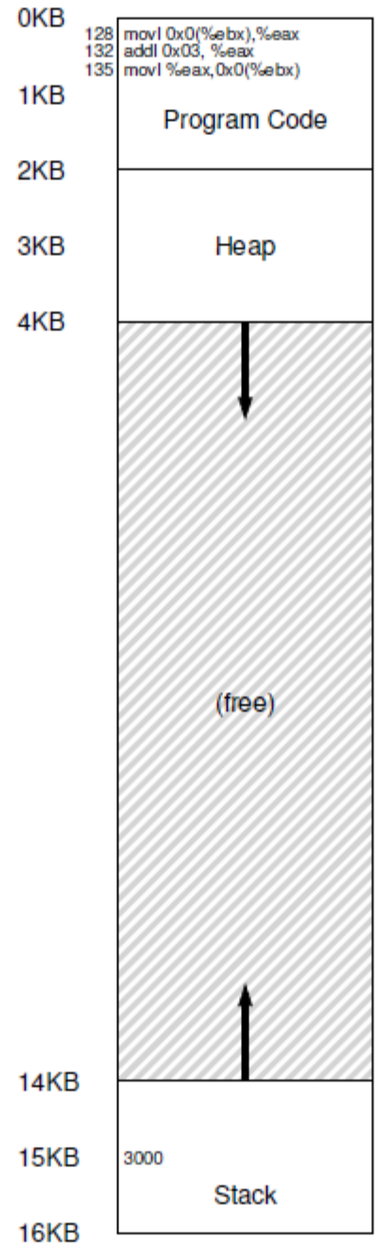

Figure 15.1: **A Process And Its Address Space**

Virtual Memory

- Recall from last time – segmentation is no longer used to separate processes' memory from one another
- Instead, *virtual addressing* is used
- Each memory access no longer refers directly to physical memory, but instead is mapped to some actual physical address

Paging

- There is a need to run programs that are too large to fit in memory
- Each program has it's "own" address space, which is broken up into chunks called pages.
- Virtual memory is broken up into fixed-sized units (commonly, 0x1000 bytes (4096 decimal)) called *pages*

Paging

mov reg, 0x100

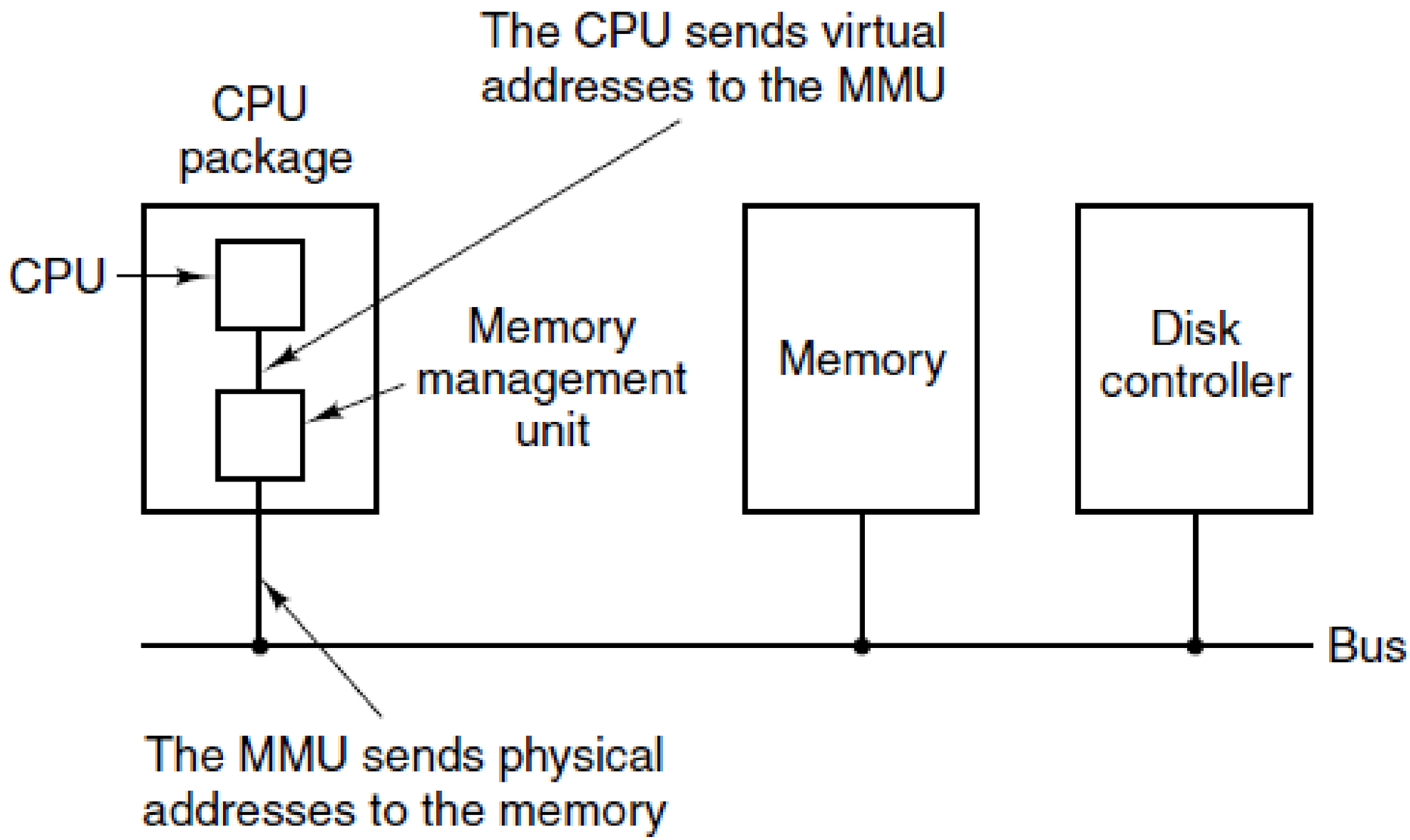

Paging

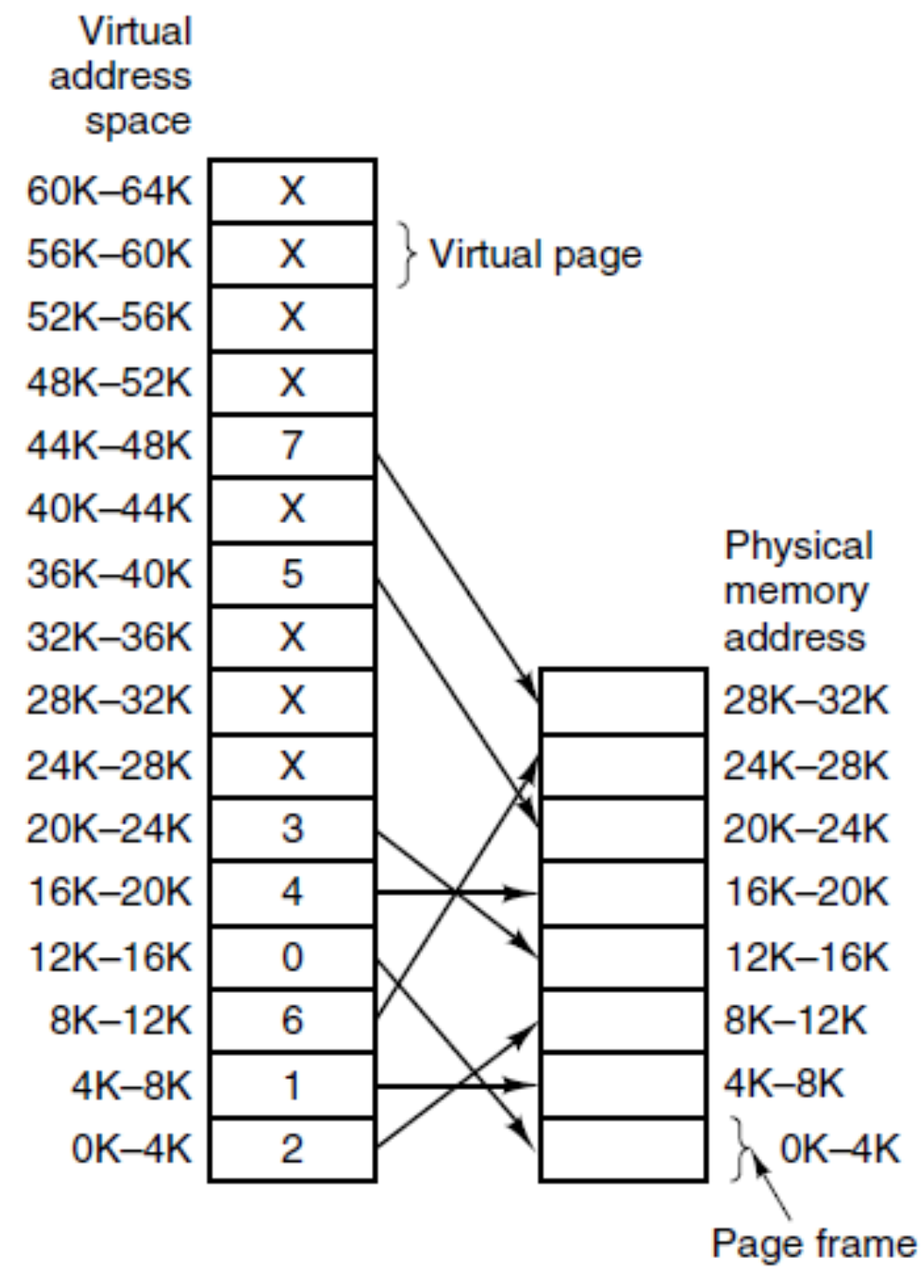

The relation between virtual addresses and physical memory addresses is given by the page table. Every page begins on a multiple of 4096 and ends 4095 addresses higher, so 4K–8K really means 4096–8191 and 8K to 12K means 8192–12287

Tanenbaum & Bo,Modern Operating Systems:4th ed., (c) 2013 Prentice-Hall, Inc. All rights reserved.

Paging

- Page sizes can vary :
  - 32-bit x86 supports 4KB and 4MB pages
  - 64-bit x86 supports 4KB, 2MB, and 1GB pages
- The underlying physical pages of memory are called *page frames*

Page Faults

- What happens if we try to access a page that is not mapped?
- The MMU notices, and we raise a CPU exception called a *page fault*
- Control is passed to the OS (via the usual interrupt/exception handling mechanism) to decide what to do
  - Kill the process (*segmentation fault*)
  - Find some physical page to map to it

Programs Bigger than Memory

- Note that this gives us a way to have programs that don't all fit into memory at once
- We can just map in the parts of the program we're using right now
- If we hit code or data that isn't mapped, we can *swap* some other page to disk and update the mappings

Types of Page Fault

- **Minor page fault** – can be serviced by just creating the right mapping
- **Major page fault** – must **load** in a page from disk to service
- **Segmentation fault** – invalid address accessed; can't service so we usually just kill the program

Page Tables

- The Memory Management Unit (MMU)has to maintain information about the virtual->physical mapping
- In the simplest case, this could be a simple array that stores the physical page number for each virtual page number
- The virtual address would then be split into two parts: an index into the mapping table, and then the offset within the page

The internal operation of the MMU with 16 4-KB pages.

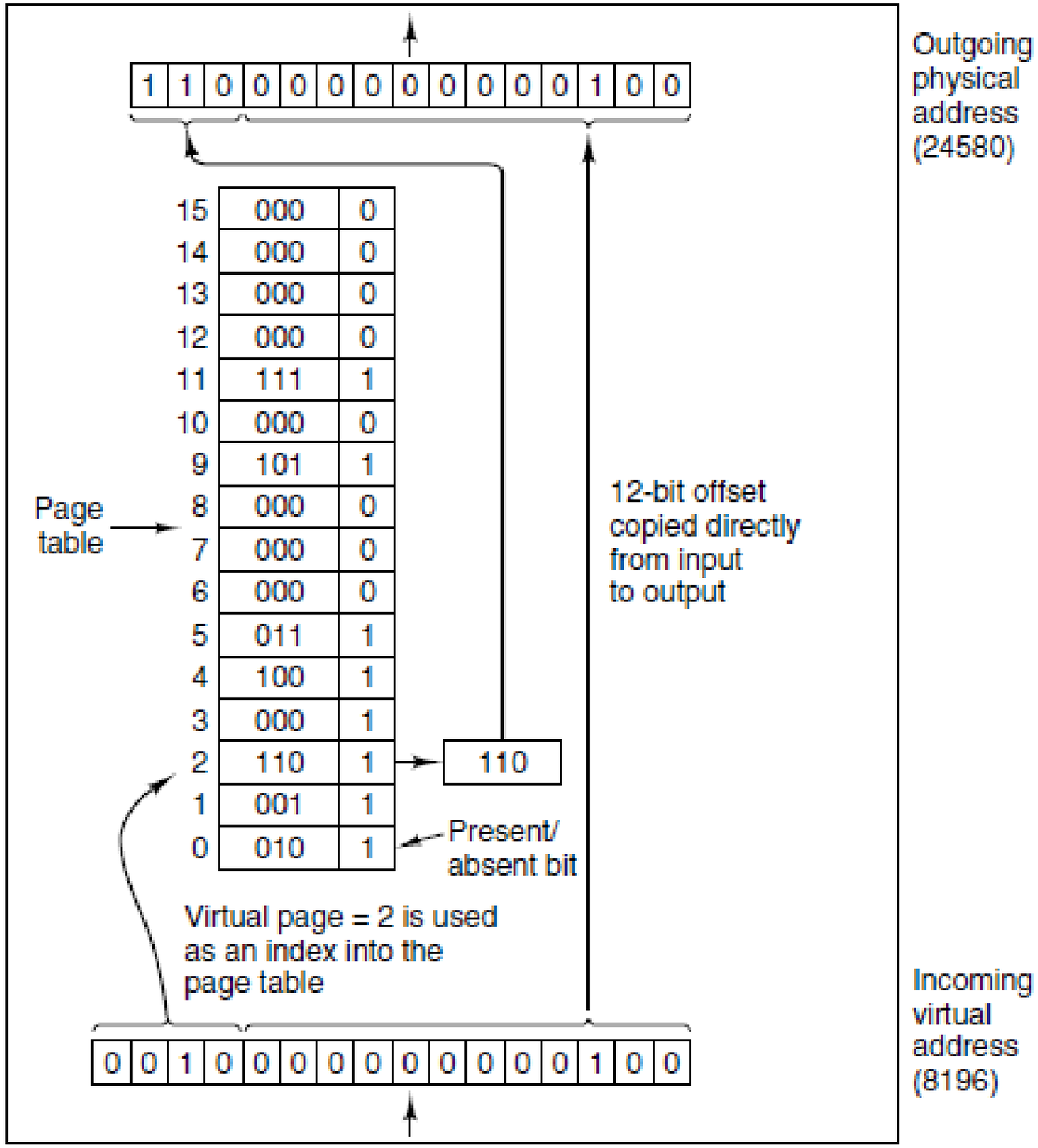

Tanenbaum & Bo,Modern Operating Systems:4th ed., (c) 2013 Prentice-Hall, Inc. All rights reserved.

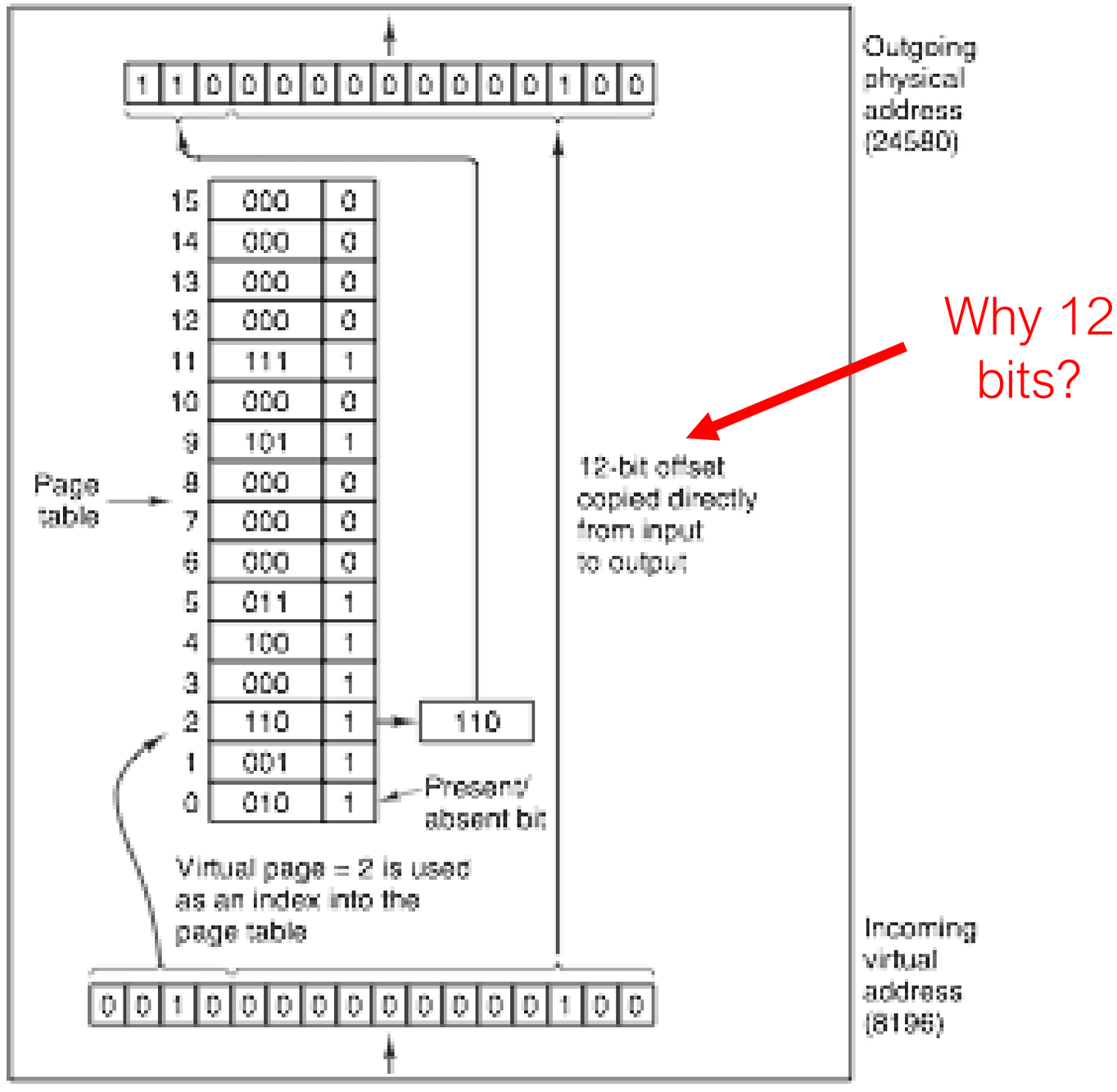
Outgoing physical address (24580)
1 1 0 0 0 0 0 0 0 0 0 0 1 0 0
15 000 0
14 000 0
13 000 0
12 000 0
11 111 1
10 000 0
9 101 1
8 000 0
7 000 0
6 000 0
5 011 1
4 100 1
3 000 1
2 110 1
1 001 1
0 010 1
Page table
110
Present/ absent bit
12-bit offset copied directly from input to output
Virtual page = 2 is used as an index into the page table
0 0 1 0 0 0 0 0 0 0 0 0 0 1 0 0
Incoming virtual address (8196)

Why 12 bits?

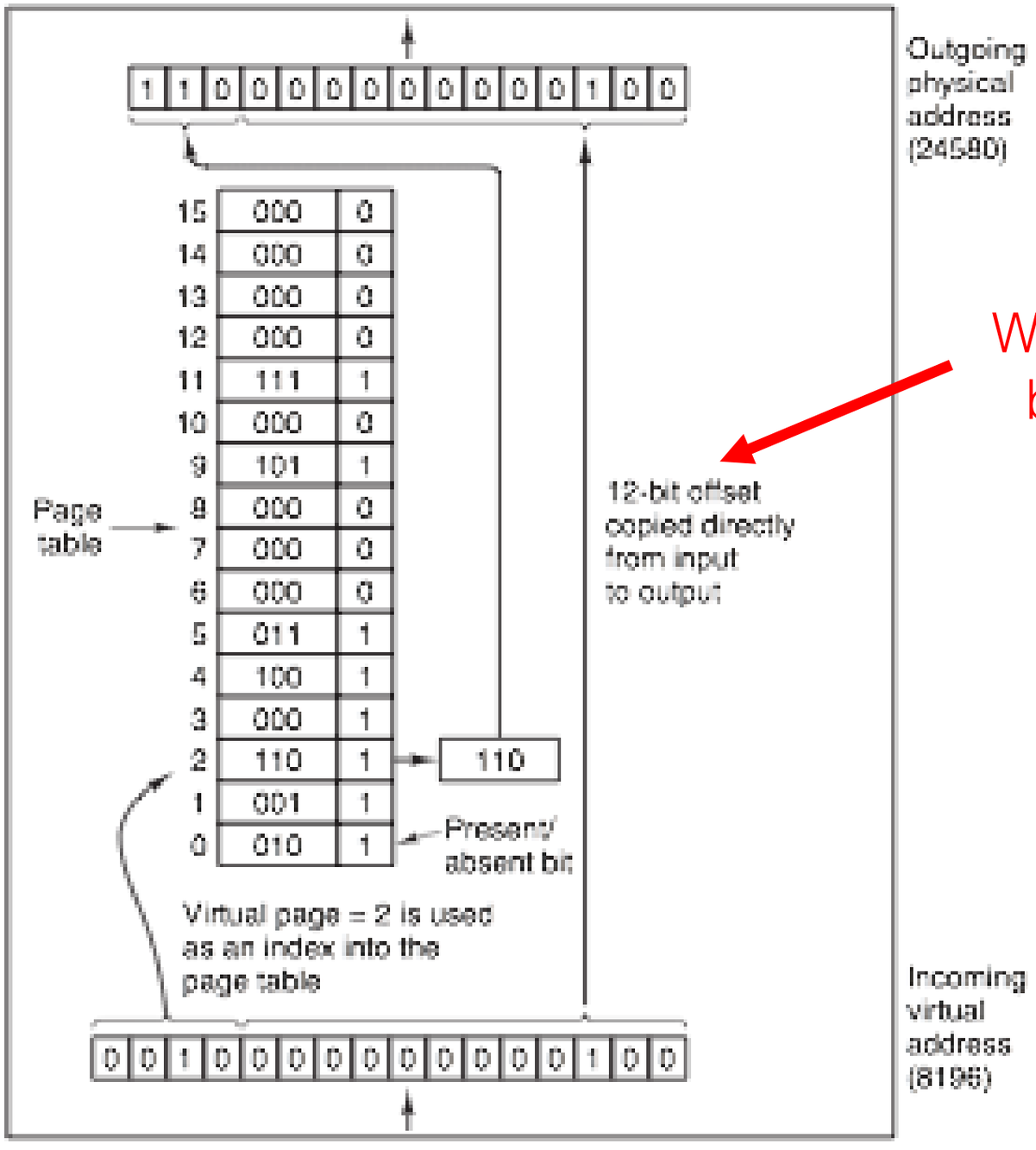

Why 12 bits?

2 ^12 = 4096

Structure of a Page Table Entry (PTE)

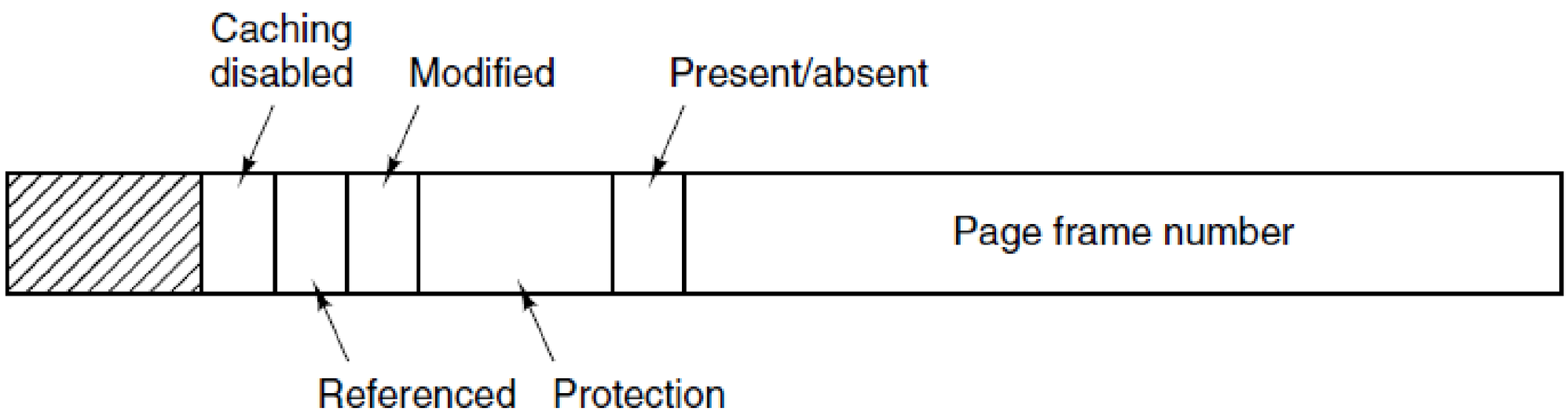

- Modified – has this page been written to?
  - If so, we will need to write to disk before evicting
- Referenced – has anyone used this page?
- Caching disabled – used if physical page is used for device I/O

Tanenbaum & Bo,Modern Operating Systems:4th ed., (c) 2013 Prentice-Hall, Inc. All rights reserved.

Real Page Tables

- In reality, this is very inefficient if the virtual address space is expected to be sparse (not many mapped pages)
- Instead, *multi-level page tables* are used
  - The virtual address now has multiple indexes
  - This allows us to only allocate tables for portions of the space that are used
- Remember: the page tables themselves are stored in memory!

Multilevel Page Tables

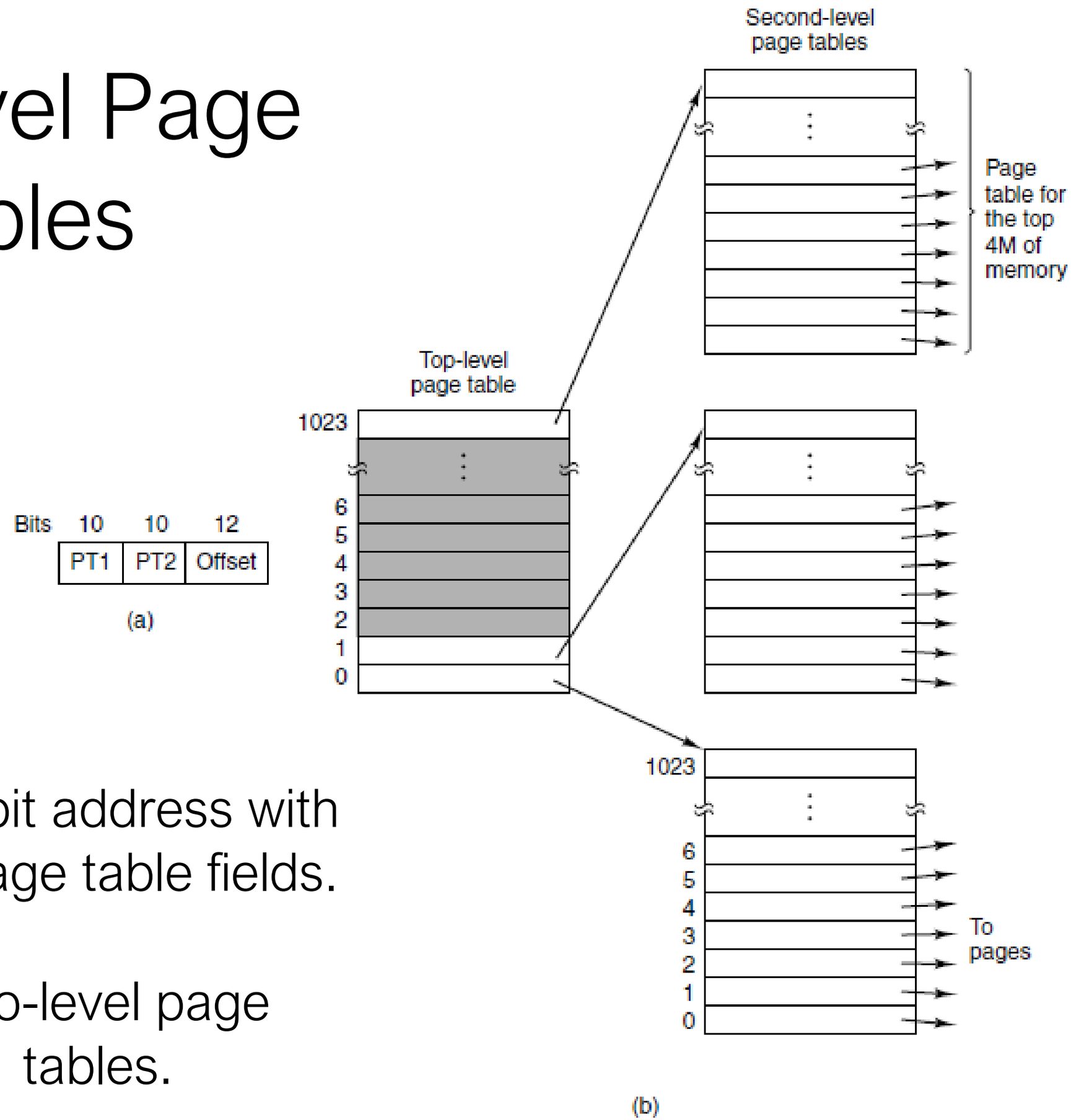

(a) A 32-bit address with two page table fields.

(b) Two-level page tables.

Tanenbaum & Bo,Modern Operating Systems:4th ed., (c) 2013 Prentice-Hall, Inc. All rights reserved.

Protection

- Because the OS can give processes different virtual address spaces, we have already solved the problem of *isolation*
- But we may want to protect processes from themselves in some cases:
  - Detect programmer errors before they do damage
  - Prevent attacks that exploit software vulnerabilities

Protection

- Simplest protection is to mark pages as read-only or read/write
  - Now, if someone attempts to modify read-only code or data, a page fault will occur
- Some processors (in x86-land, starting with the AMD64 in 2003) have a bit to prevent code from being executed on a certain page
  - This has been called variously the NX bit, the XD bit, Data Execution Prevention (DEP)
  - The idea is to prevent buffer overflows from being exploitable – the attacker won't be able to run his own code because it will be in a data region

Translation Lookaside Buffer

- Walking the page table hierarchy each time memory is accessed gets very expensive
  - If we have to do 2 table lookups for every memory access, we've just made memory 3x slower
- Instead, the CPU keeps a *small* set of mappings that it can translate directly without consulting the page tables

Translation Lookaside Buffers

Valid	Virtual page	Modified	Protection	Page frame
1	140	1	RW	31
1	20	0	R X	38
1	130	1	RW	29
1	129	1	RW	62
1	19	0	R X	50
1	21	0	R X	45
1	860	1	RW	14
1	861	1	RW	75

Tanenbaum & Bo,Modern Operating Systems:4th ed., (c) 2013 Prentice-Hall, Inc. All rights reserved.

TLB Misses

Soft:

- The page referenced is not in the TLB but is in memory.
- 10-20 Machine instructions (2 nanosecs)

Hard:

- Page is NOT in memory.
- Takes a few milliseconds (million times slower !!)

Software TLB Management

- In some architectures (e.g. SPARC, MIPS), the TLB is managed by software
- TLB entries are explicitly loaded by the OS
- If we look up an address and it's not in the TLB (a *TLB miss*), we raise a TLB fault
- The OS then has to fill in the missing TLB entry

Software TLB Management

- Why manage the TLB explicitly instead of letting hardware do it?
  - The MMU can be much simpler, which saves space on the CPU that can be used for more caches
  - Flexibility – the OS can choose its own algorithms for which TLB entries to evict and add
- But: this is generally slower than hardware-managed TLBs

TLBs and Context Switching

- TLBs map a virtual address to a physical one
- But once we change to a new process, these mappings are no longer valid, and a *TLB flush* occurs
- This makes context switching more expensive – the first few memory accesses a process makes will have to be serviced by walking the page tables

Tagged TLBs

- On some architectures, each TLB entry can be associated with a *tag* that says what address space it belongs to
- Now we don't have to flush the TLB when switching address spaces
- This can help make context switching faster – some TLB entries might still be valid when we switch back to a process

Page Table Overhead Calculations

- Using page tables has some overhead
- Just how much?
- Depends on the exact paging scheme used

Page Table Overhead Calculations

- "Worst" case:
  - single-level page table, 64-bit virtual address space, 4KB pages, 4 byte PTEs
  - 2^{64} / 4096 * 4 bytes = 2^{52} * 2^{2} = 2^{54} bytes = 16 *petabytes* of memory used for pages
    - 2^{50} = Petabyte or 1024 terabytes or million gigabytes
  - And that's just for one process!

Virtual Address Translation in x86

- We will, for now, consider only:
  - 32-bit x86
  - 4KB and 4MB ("super") pages
- So not:
  - 32-bit PAE (allows using more than 4GB of ram on a 32-bit machine)
  - 64-bit mode

x86 Paging Basics

- x86 virtual address translation uses a two-level page table:
  - A top-level *page directory* stores pointers to the *page tables*
  - *Page tables* contain the actual *page table entries (PTEs)* referring to physical page frames
- The current mappings in use are determined by the value of the CR3 CPU register, which stores the *physical address* of the page directory

x86 Paging

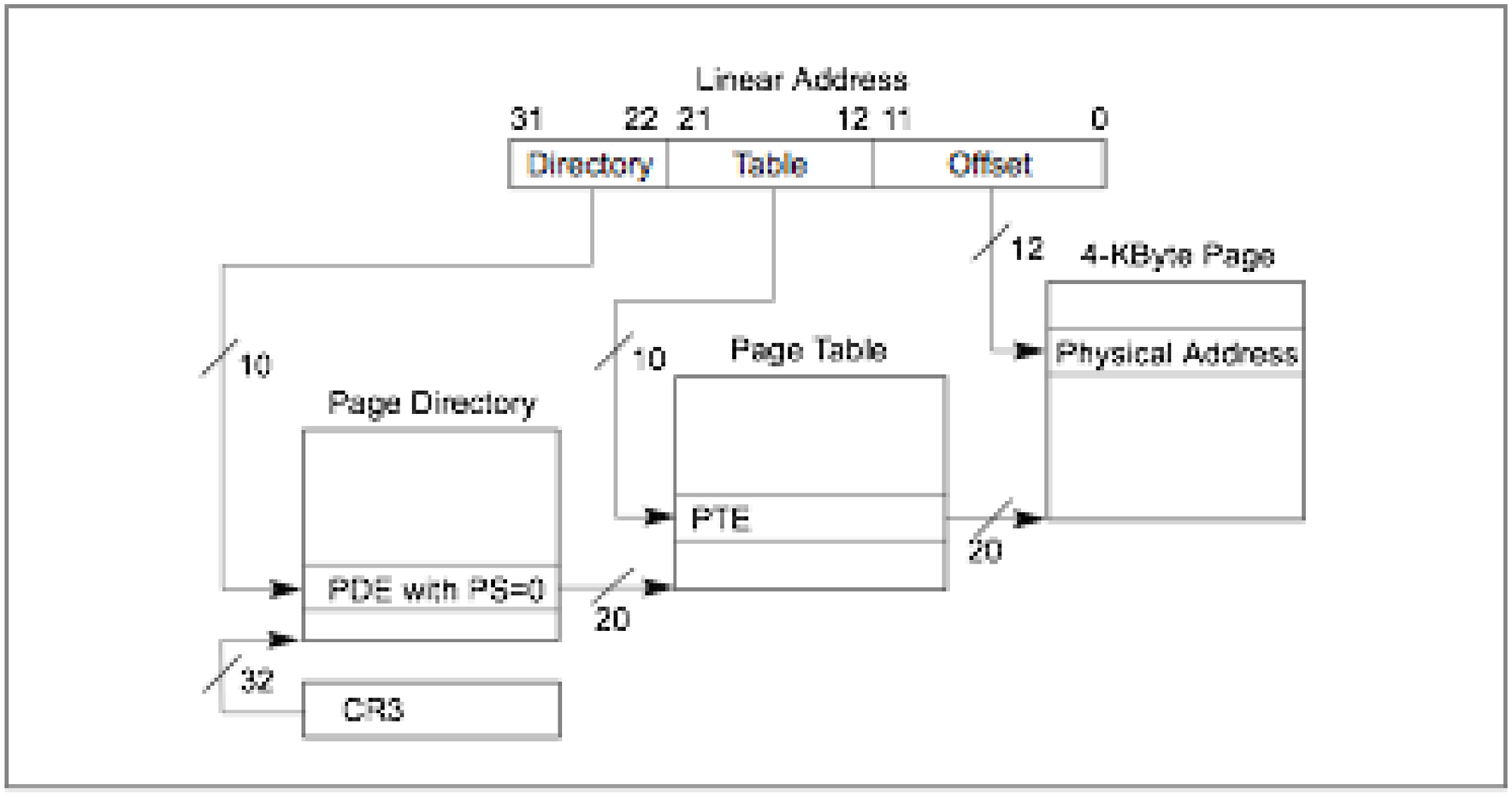
Linear Address
31
22
21
12
11
0
Directory
Table
Offset
12
4-KByte Page
Physical Address
10
10
Page Table
Page Directory
PTE
20
PDE with PS=0
20
32
CR3

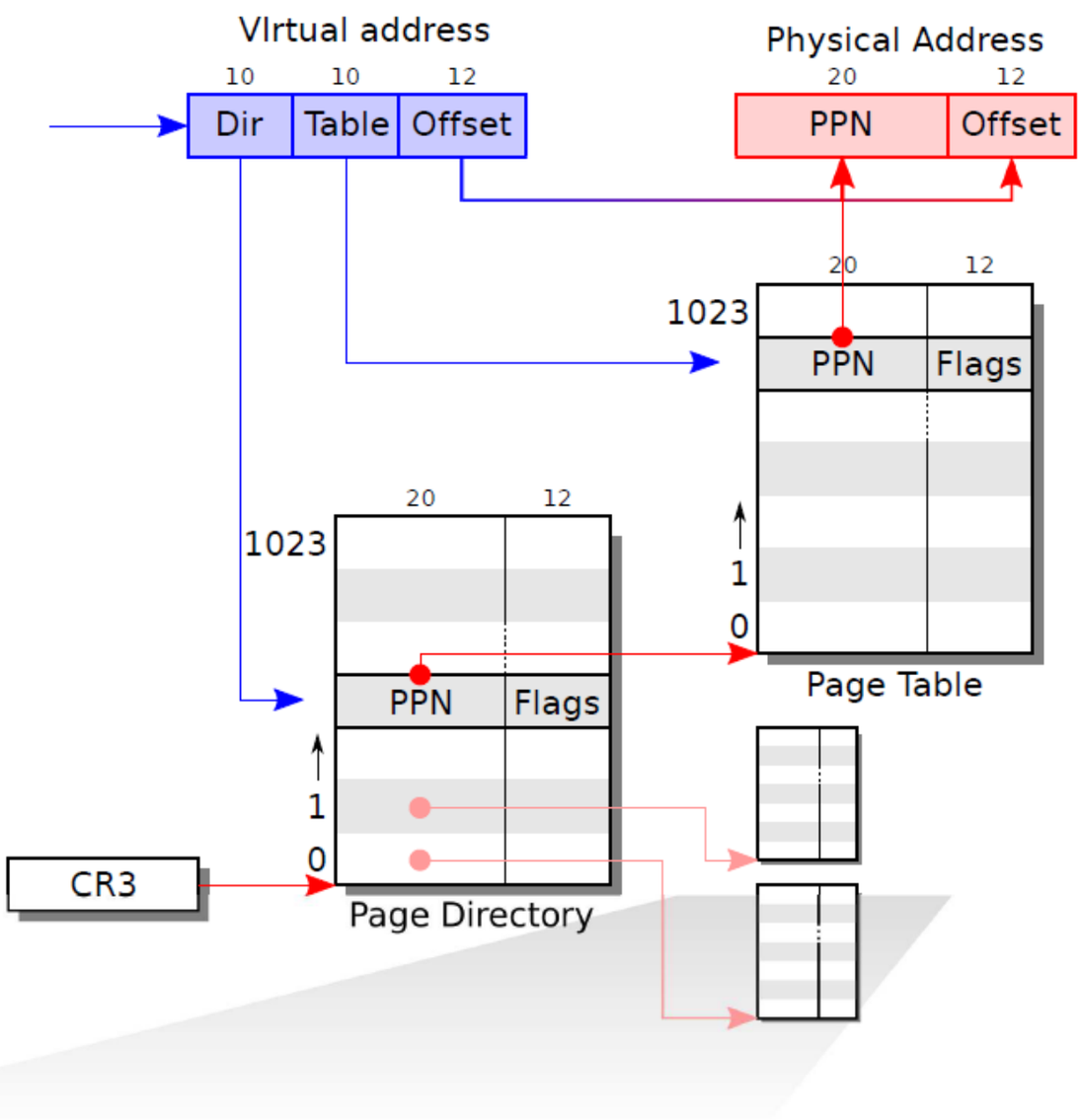
VIrtual address
10
10
12
Dir
Table
Offset
Physical Address
20
12
PPN
Offset
20
12
1023
PPN
Flags
1
0
Page Table
20
12
1023
PPN
Flags
1
0
CR3
Page Directory

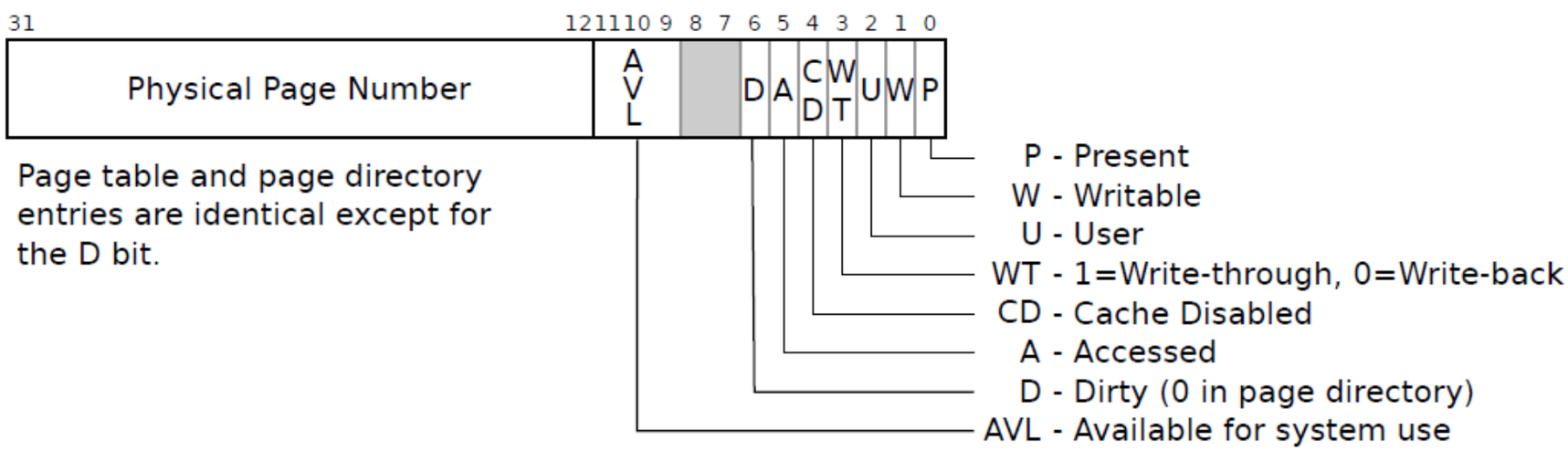
31
12 11 10 9 8 7 6 5 4 3 2 1 0
Physical Page Number
AVL
D
A
CD
WT
U
W
P
Page table and page directory entries are identical except for the D bit.
P - Present
W - Writable
U - User
WT - 1=Write-through, 0=Write-back
CD - Cache Disabled
A - Accessed
D - Dirty (0 in page directory)
AVL - Available for system use

x86 PDEs and PTEs

- The entries in a page directory and a page table have an almost identical format
- Each 32-bit
- The basic structure:
  - Physical address of a page table (for PDEs) or memory page (for PTEs)
  - Protection, caching, etc. flags
  - A bit to indicate present/not present

<Recap>

Page Table Size

- For 32-bit machine with 4kb pages we need:
  - 1M Page Table Entries
    - (32 bits –
      - 12 bits for page offset =
      - 20 bits, 2^{20} = 1M)
  - Each PTE is 4 bytes (20 bits for physical page + 12 permission bits)
  - 4 MB **Total**

Page Table Size

- Not bad…
  - Except each program needs it own page table
  - If we have 100 programs running, we need 400 MB of page tables.
- The worst part:
  - We can't swap the page tables out to disk
  - If the page table is not in RAM, we have no way to access it.

How to fix? Indirection!

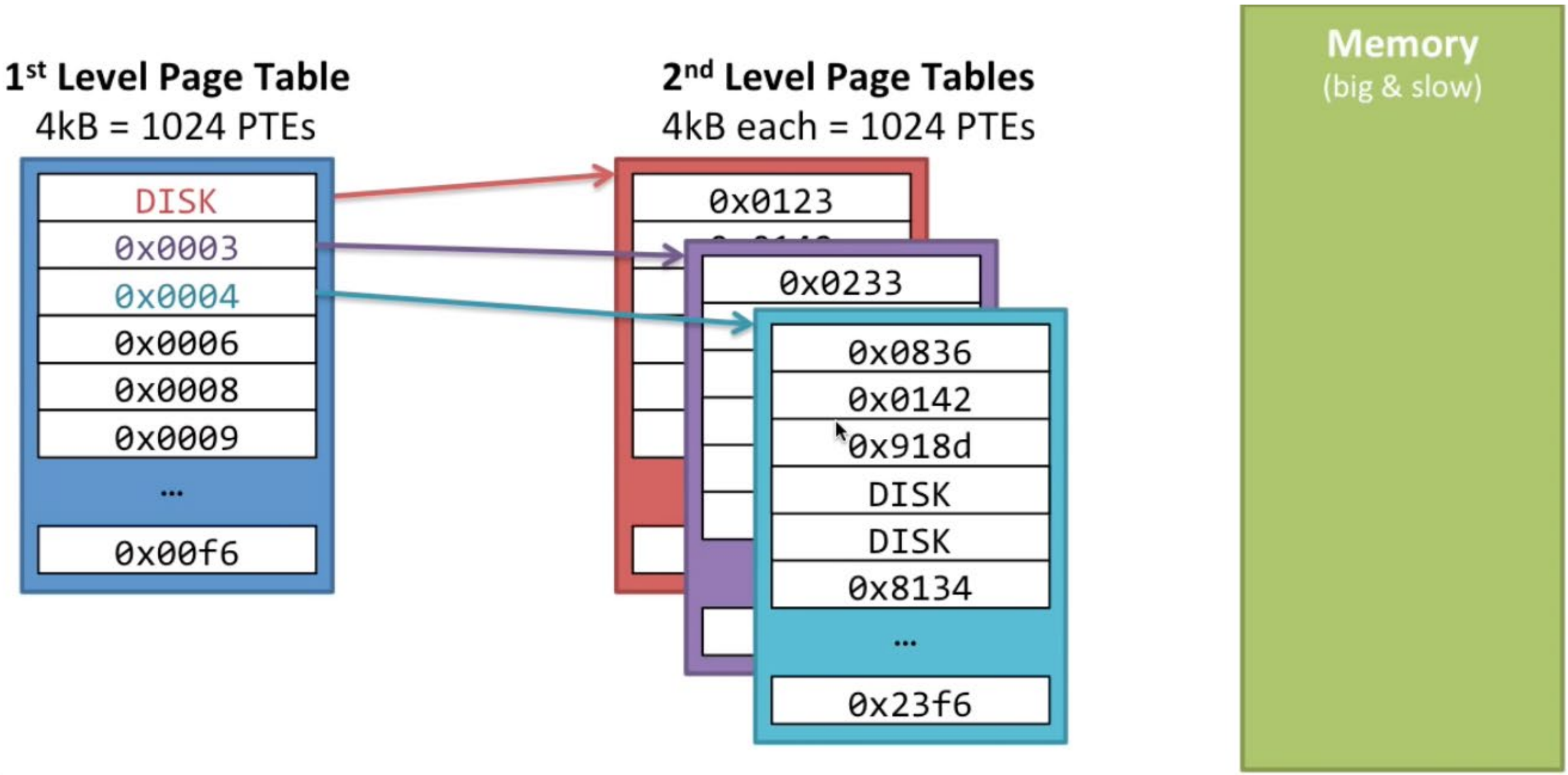

Some paged into disk!

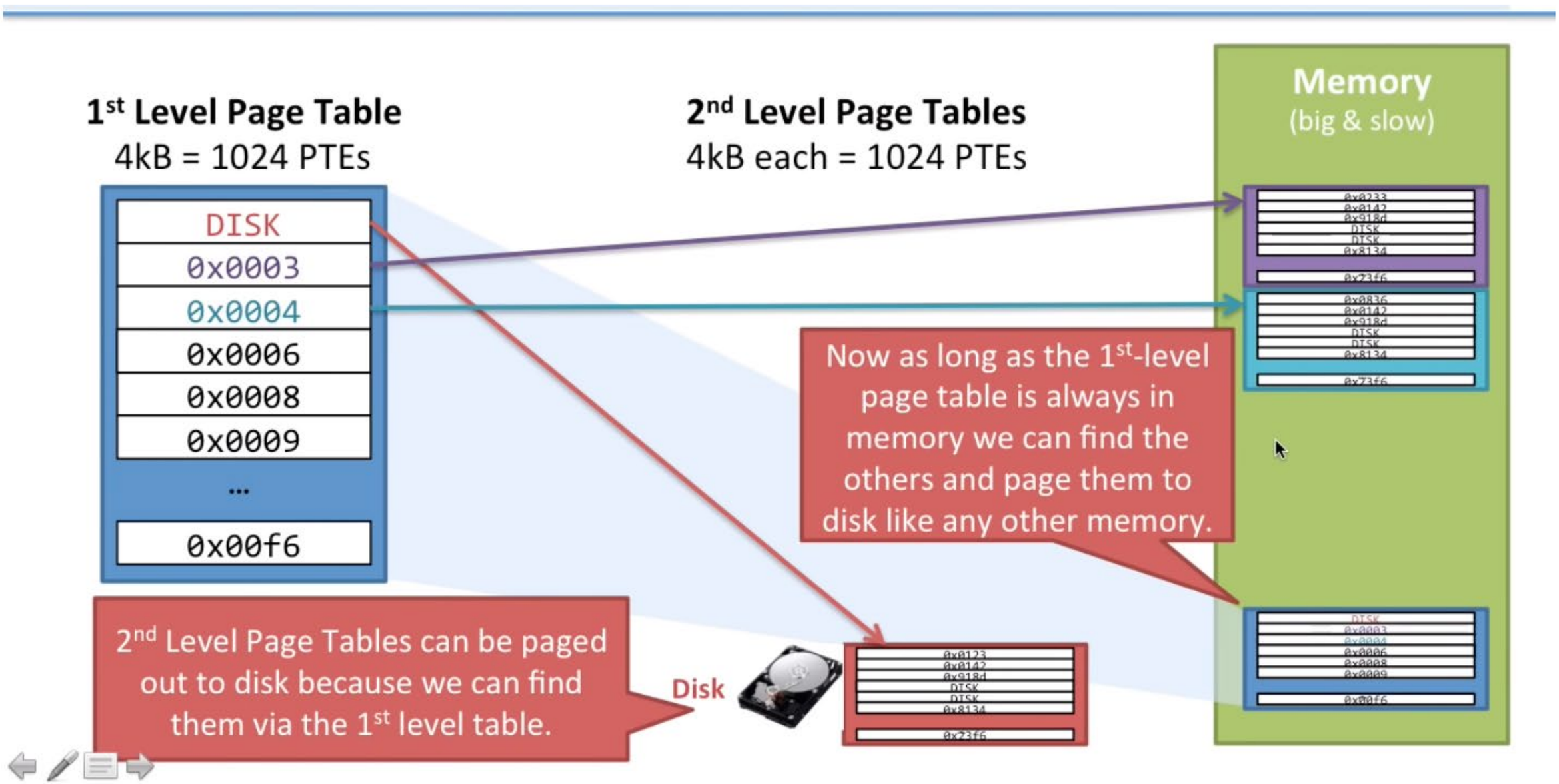

Example

- Q: With multi level page tables, what's the smallest amount of page table data we need to keep in memory for each 32 bit application to access memory?

A. 4 MB + 4 KB (always need the whole page table plus 1st level page)

B. 4MB (always need the whole page table in RAM)

C. 4 KB + 4KB (need the 1st level page plus one 2nd level page table)

D. 4 KB (just need the 1st level page table)

Answer

- We always need the 1st level page table so we can find the 2nd level ones. The first level page table has 1024 entries and each entry is 4 bytes. So that's 4096 or 4 KB.

- The first level page table only helps us find other page tables. It isn't enough by itself to translate any program addresses. So we need at least one 2nd level page table to actually translate memory addresses.

- One first level page table: 4 KB
- One second level page table: 4 KB
- 4 KB + 4KB (much better than 4MB per application)

Address Translation

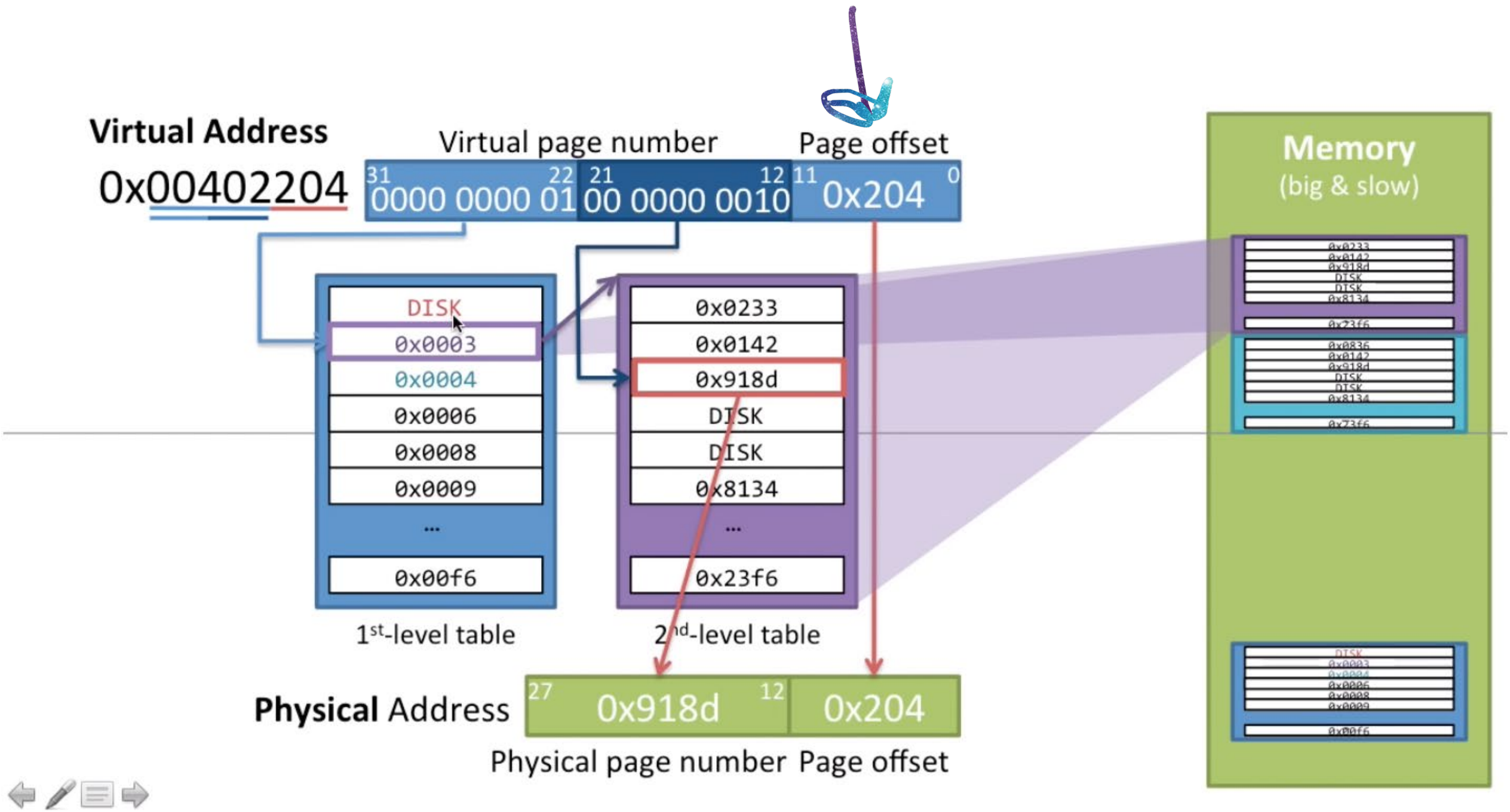

Example 2

- Q: If I'm running 100 applications on my computer with a 2 level page table, how much memory do I have to keep in RAM at all times to be able to access the application data?

A. 4 KB + 4 KB (need the 1st level page table and one 2nd level page table)

B. 400 KB (just need the first level page table for each application)

C. 800 KB (need the 1st and 2nd level page tables for each application)

D. 400 MB (need the full page table for each application)

Answer

- 800 KB
- For each application we need the 1st level page table so we can find the 2nd level ones. We also need to store at least one 2nd level page table so we can access some memory to do something.
- If we have 100 applications
  - 100 * (4KB + 4KB) = 800KB
- Much better than 400MB we would need without multi level page tables.

</Recap>

Worked Example

- Let's take an arbitrary address we got from running xv6: 0x8010c608

- In binary: 10000000000100001100011000001000

- CR3 = 0x003ff000

Worked Example

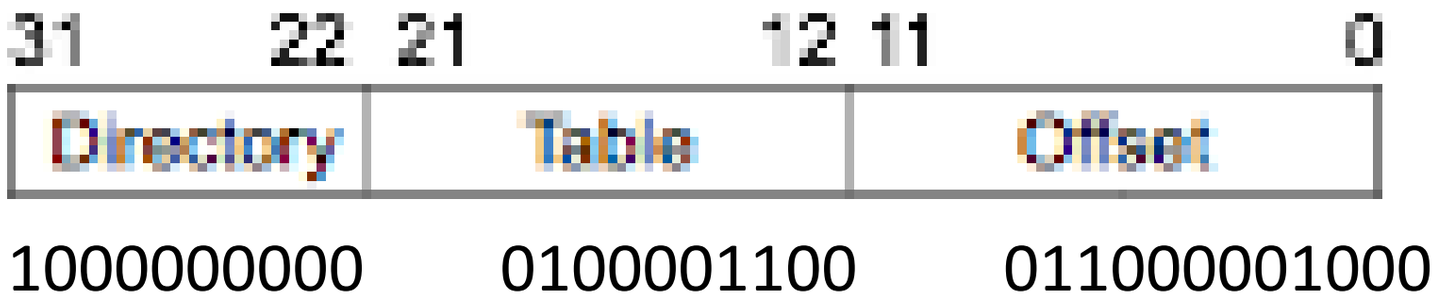


```
Directory index  =  1000000000     =  512
Table index      =  0100001100     =  268
Offset           =  011000001000   =  1544
```

Page Directory

CR3 = 0x003ff000

Directory index = 512

Address	Entry
0x003ff000:	0x00000000
0x003ff004:	0x00000000
0x003ff008:	0x00000000
0x003ff00c:	0x00000000
0x003ff010:	0x00000000
[...]	
0x003ff800:	0x003fe027
0x003ff804:	0x003fd027
0x003ff808:	0x003fc027
0x003ff80c:	0x003fb027
0x003ff810:	0x003fa027
0x003ff814:	0x003f9027
[...]	

Note:
0x003ff000 + 512 * 4
= 0x003ff800

Page Table Entry

0x003fe027

↓

0000 0000 0011 1111 1110 0000 0010 0111

31	30	29	28	27	26	25	24	23	22	21	20	19	18	17	16	15	14	13	12	11	10	9	8	7	6	5	4	3	2	1	0	
Address of page table																				Ignored				Q	Ign	A	PCD	PWT	U/S	R/W	1	PDE: page table

Address of page table: 0x3fe000

(A) Accessed: Yes

(PCD) Cache disabled: No

(PWT) Write through caching: No

(U/S) User-accessible: Yes

(R/W) Read/Write: Yes

(P) Present: Yes

Page Table

Address of page table:
0x3fe0000

Table index = 268

Address	Entry
0x003fe000:	0x00000063
0x003fe004:	0x00001003
0x003fe008:	0x00002003
0x003fe00c:	0x00003003
0x003fe010:	0x00004003
[...]	
0x003fe430:	0x0010c063
0x003fe434:	0x0010d063
0x003fe438:	0x0010e063
0x003fe43c:	0x0010f063
0x003fe440:	0x00110063
0x003fe440:	0x00111063
[...]	

Note:
0x003fe000 + 268 * 4
= 0x003fe430

Page Table Entry

0x0010c063

↓

00000000000100001100000001100011

31	30	29	28	27	26	25	24	23	22	21	20	19	18	17	16	15	14	13	12	11	10	9	8	7	6	5	4	3	2	1	0	
Address of 4KB page frame																				Ignored			G	PAT	D	A	PCD	PWT	U/S	R/W	1	PTE: 4KB page

Address of physical page: 0x10c000

(G) Global: No

(PAT) PAT page: No

(D) Dirty: Yes

(A) Accessed: Yes

(PCD) Page Cache Disable: No

(PWT) Page Write Through: No

(U/S) User-accessible: No

(R/W) Read/Write: Yes

(P) Present: Yes

Physical Page

Address of page:
0x10c000

Offset = 1544 = 0x608

Data: 0x8010c628

```
0000000: 0000 0000 0000 0000 0000 0000 0000 0000  ................
0000010: 0000 0000 0000 0000 0000 0000 0000 0000  ................
0000020: 0000 0000 0000 0000 0000 0000 0000 0000  ................
0000030: 0000 0000 0000 0000 0000 0000 0000 0000  ................
0000040: 0000 0000 0000 0000 0000 0000 0000 0000  ................
0000050: 0000 0000 0000 0000 0000 0000 0000 0000  ................
0000060: 0000 0000 0000 0000 0000 0000 0000 0000  ................
0000070: 0000 0000 0000 0000 0000 0000 0000 0000  ................
0000080: 0000 0000 0000 0000 0000 0000 0000 0000  ................
0000090: 0000 0000 0000 0000 0000 0000 0000 0000  ................
00000a0: 0000 0000 0000 0000 0000 0000 0000 0000  ................
                                [...]
0000600: 8029 1180 8202 0000 28c6 1080 524a 1080  .)......(...RJ..
0000610: 3a87 ff07 0000 0000 38c6 1080 b448 1180  :.......8....H..
0000620: 2824 1180 0100 0000 38c6 1080 8038 1080  ($......8....8..
0000630: 0000 4080 0000 008e 48c6 1080 2138 1080  ..@.....H...!8..
0000640: 0000 0000 54c6 1080 f87b 0000 0000 0000  ....T....{......
0000650: 0000 0000 0000 0000 0000 0000 0000 0000  ................
0000660: 0000 0000 d483 1080 0000 0000 0000 0000  ................
0000670: 5c1f 1080 6721 1080 ff23 1080 8924 1080  \...g!...#...$..
0000680: 635e 1080 7555 1080 4d67 1080 5b65 1080  c^..uU..Mg..[e..
0000690: 0000 0000 0200 0000 0100 0000 0100 0000  ................
00006a0: acc8 1080 4c03 1180 0000 0000 e803 0000  ....L...........
00006b0: ad03 0000 c800 0000 1e00 0000 0200 0000  ................
00006c0: 2000 0000 3a00 0000 0000 0000 0000 0000   ...:...........
00006d0: 0000 0000 0000 0000 0000 0000 0000 0000  ................
```

Super Pages

- If the Page Size Extension (PSE) bit is set in CR4, we can optionally have entries in the page directory point directly to 4MB pages

- This can be beneficial because it reduces paging overhead (only one level of lookup, more data mapped)

Translation with Super Pages

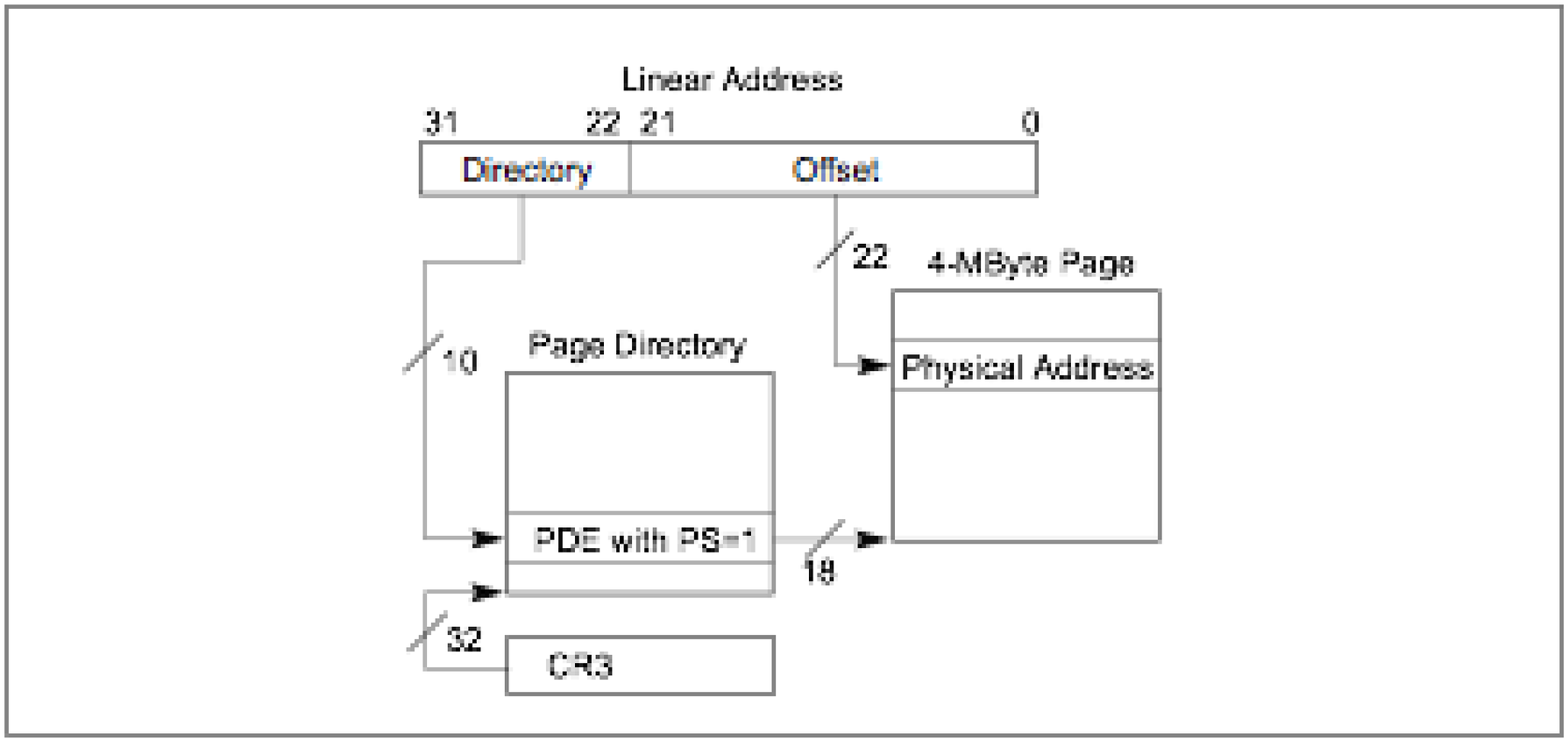

Running the Numbers

- Basics: super pages use 22 bits for offset because 2^{22} = 4MB
- How many entries in a 4KB page table?
  - 1024 entries = 4MB addressed by one page table
  - So each page directory entry addresses 4MB of memory whether it points to a page table or a super page
- How many page directory entries?
  - We want to address 4GB of memory => 4GB/4MB = 1024
- In general that's why for x86 the available sizes are 4KB and 4MB pages

Example 3

- Q: Suppose one process has mapped 512MB worth of virtual address space using 4KB pages. How much space is required?
- Remember: Each page table covers 4MB of memory

Example 3

- We need the 1st level page table. **4KB**
- We need to be able address 512 MB or memory. How many 2nd level page tables do we need since each addresses 4 MB? 512/4 = **128**
- What's the size of each page table? 4KB.
- How much total space for the Second level page tables? 128 * 4KB
- Total:
  = sizeof(1 page dir) + number of second level pages * sizeof(1 page table)
  = 4KB + 128 * 4KB
- = 4KB + .5 MB
- = ~0.503 MB

- Virtual Memory
- Page Replacement Algorithms
- XV6 Implementation

Page Replacement Algorithms

- If we can't fit everything in memory, eventually we will have to choose something to evict and write to disk
- As with scheduling algorithms, this is a well-studied area and there are lots of strategies
- This general principle shows up any time we have a limited-size cache – strategies described here apply to all of them

Paging (reminder)

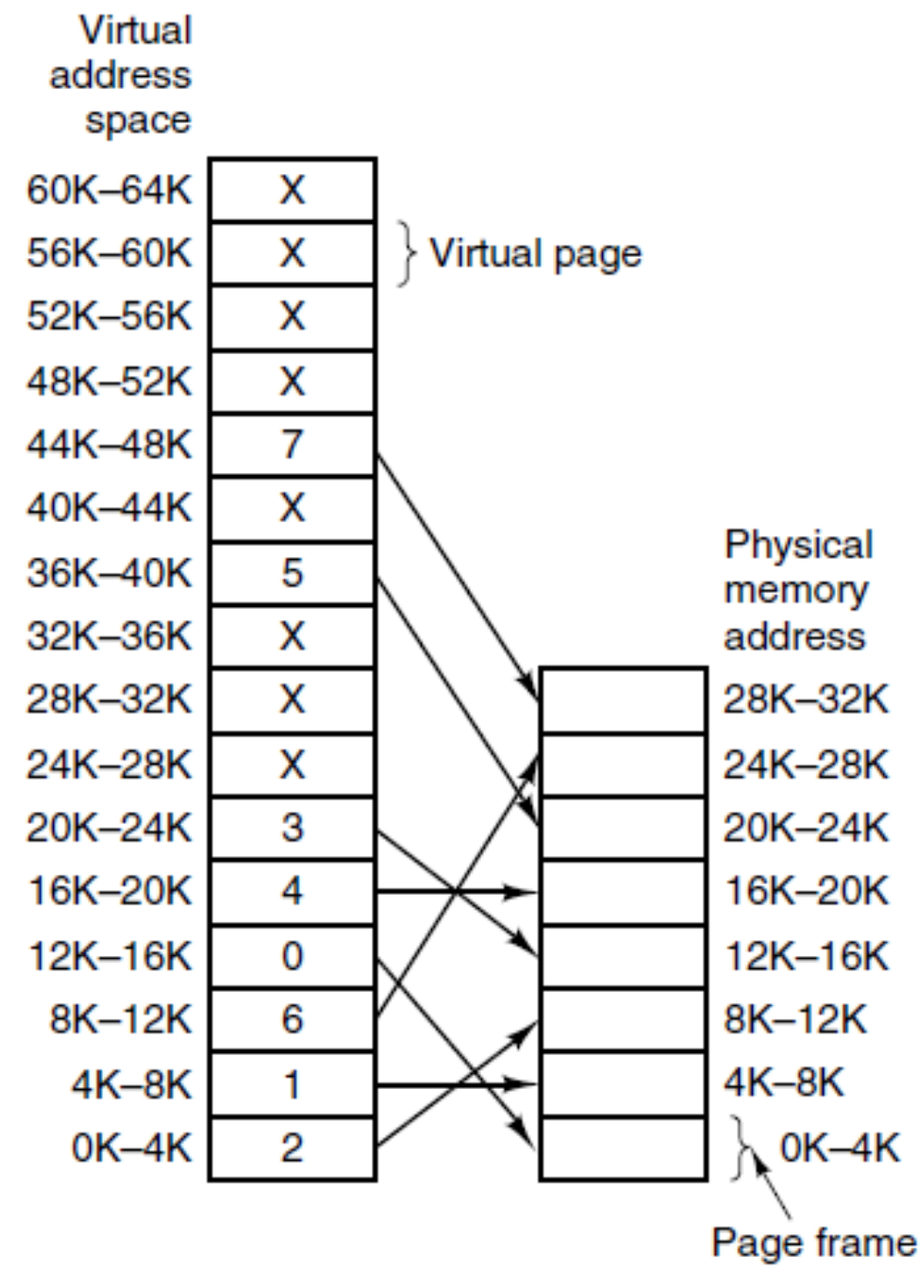

The relation between virtual addresses and physical memory addresses is given by the page table. Every page begins on a multiple of 4096 and ends 4095 addresses higher, so 4K–8K really means 4096–8191 and 8K to 12K means 8192–12287

Tanenbaum & Bo,Modern Operating Systems:4th ed., (c) 2013 Prentice-Hall, Inc. All rights reserved.

The "Optimal" Algorithm

- At the time of a fault, consider the set of pages in memory
- Given the code executing, they will each be referenced some number of instructions from now
- To choose one to evict, just pick the one that's furthest from being referenced

The "Optimal" Algorithm

"Prediction is very difficult, especially about the future."
– Niels Bohr

- **Problem**: requires the OS to predict the future
- Still, it's useful as a goal to work toward
- We can benchmark other algorithms by how close they get to being optimal

- Remember that page table entries contain bits that indicate whether the page was recently *referenced* or *modified (R & M)*

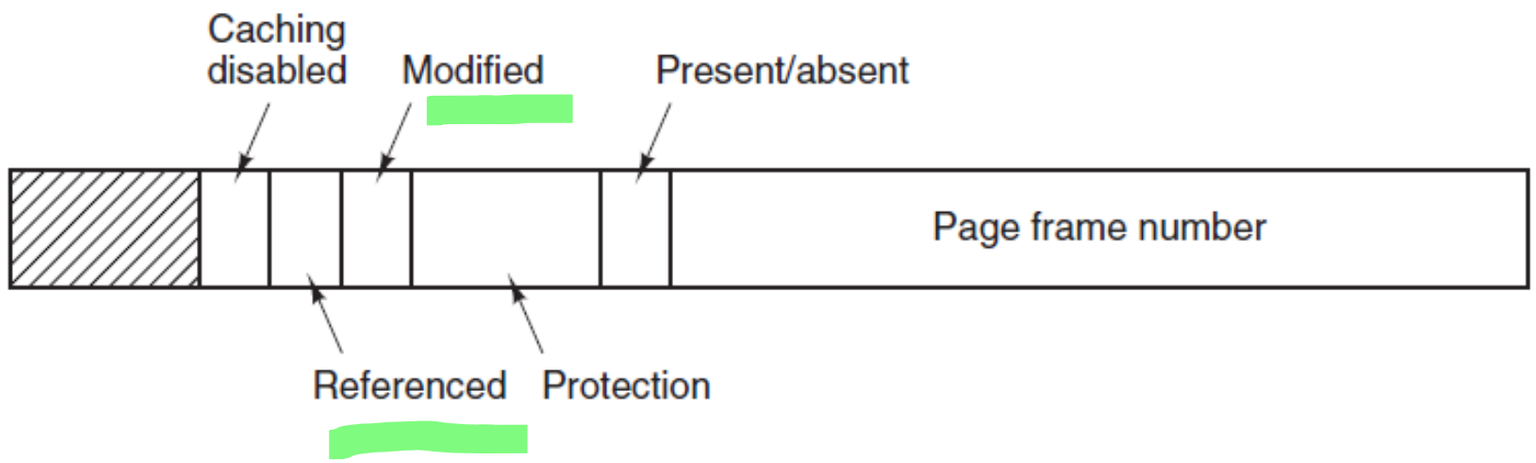

Figure 3-11. A typical page table entry.

Not Recently Used

- We can use these bits to track which pages in memory have not been touched in a while
- If a page hasn't been used in a while, it may be a good candidate for eviction

Implementing Not Recently Used

- If we just rely on the CPU to mark referenced pages, over time eventually all pages would be referenced
- Instead we can have the OS periodically clear the referenced bit (say, every clock tick)
- Now if the referenced bit is 0, we know the page has not been referenced in at least one clock tick

Implementation

- When a page fault occurs, the OS inspects all the pages and divides them into 4 categories based on values of R & M bits:
- **Class 0:** not referenced, not modified
- **Class 1:** not referenced, modified
- **Class 2:** referenced, not modified
- **Class 3:** referenced, modified

- Clock interrupts clear the R bit but NOT the M bit.

- NRU removes a page at random from the lowest numbered nonempty class.

First In, First Out (FIFO)

- Simple algorithm:
  - Keep a linked list of pages in the order they were brought into memory
  - Tail is most recent, head is oldest
  - To evict, throw out the one at the head of the list
- **But**: just because it's the oldest doesn't mean it's not being used!

Second Chance

- Since we have the referenced bit available, we can do slightly better than FIFO
- Before throwing out the oldest page, check if it's been referenced
- If it has, clear the referenced bit and move it to the back of the list (as though it were a new page)
- Keep looking through the list for something to evict

Second Chance

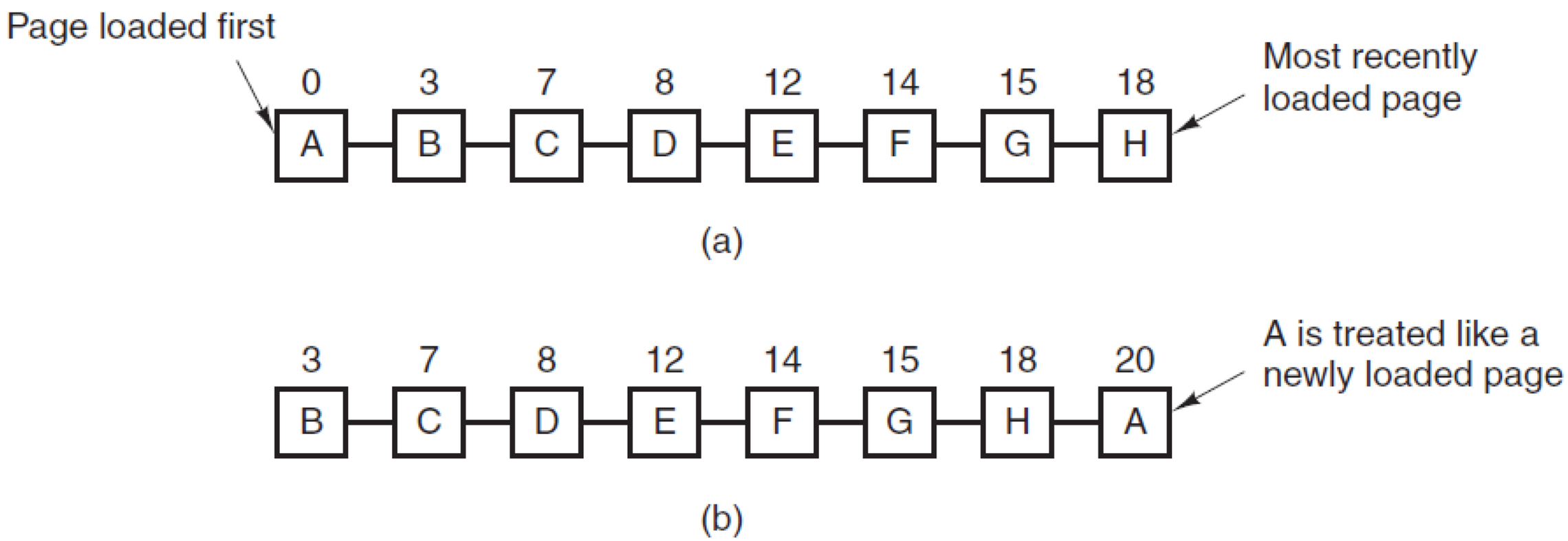

Figure 3-15. Operation of second chance. (a) Pages sorted in FIFO order. (b) Page list if a page fault occurs at time 20 and *A* has its *R* bit set. The numbers above the pages are their load times.

Clock

- FIFO/Second Chance is inefficient because it may have to move around entries in the list often
- As an optimization, we can imagine the pages arranged in a circle and keep a pointer (or index) indicating the position of the "clock hand"
- Clock hand points to the oldest page – so now we can apply Second Chance by just updating the position of the clock hand

Clock

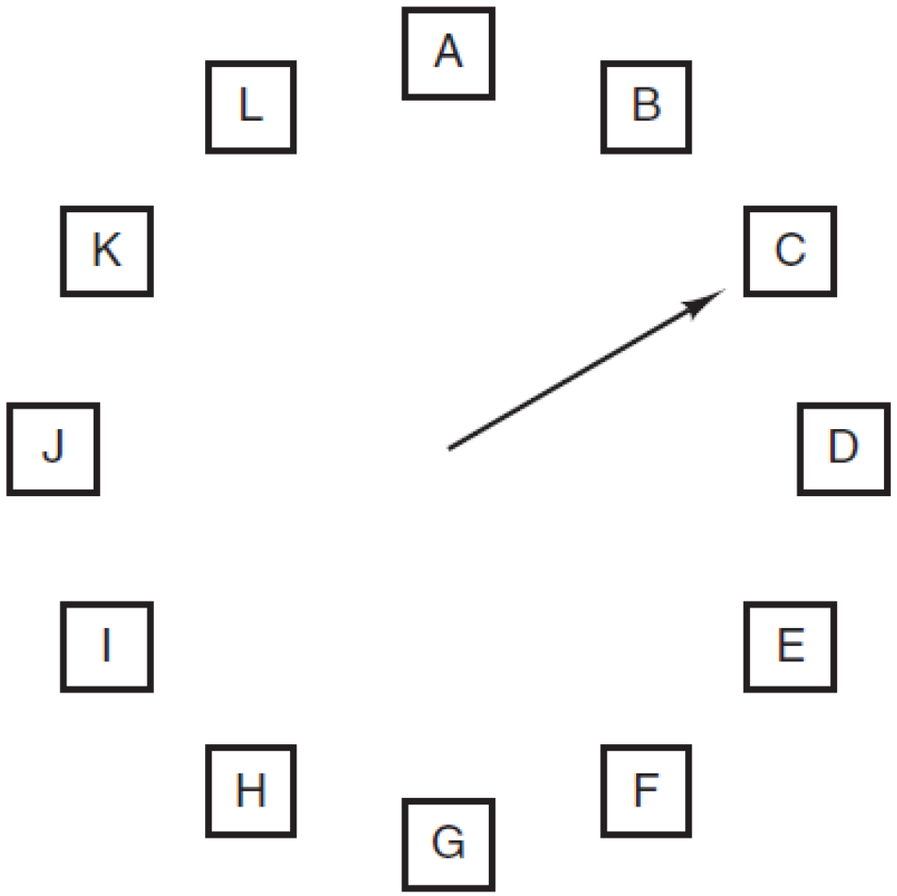

When a page fault occurs, the page the hand is pointing to is inspected. The action taken depends on the R bit:

R = 0: Evict the page

R = 1: Clear R and advance hand

Figure 3-16. The clock page replacement algorithm.

Least Recently Used (LRU)

- Observation: pages that have been used a lot recently will probably be used again soon
- So a good strategy might be: throw out the *least recently used* page
- Very expensive to implement !

LRU Implementation

- One possibility: keep a list of pages (as with FIFO) and update it every time memory is referenced
- Or, if we have extra hardware support – have hardware write a timestamp to the PTE every time every time a page is referenced
- Neither of these is particularly appealing

Not Frequently Used (NFU)

- We can (approximately) simulate LRU in software reasonably cheaply though
- Maintain a list of counters, one per page
- At each clock tick, if a page has been referenced, update its counter
- Now we have a rough count of how often each page has been referenced over time

NFU Problems

- A page might be referenced very often early on, and then never referenced again
- But its count will remain high for a long time, preventing it from getting evicted
- Meanwhile, a page that is referenced periodically (say every 20 ticks) may have a lower count but be in active use

Aging

- To solve this problem, we can have counter values decay over time
- Each clock tick, shift all counters right by one bit
- Add in the reference bit as the leftmost bit
- To evict, just choose the lowest counter value – because more recent references are in the more significant digits, they have greater weight

Aging

	R bits for pages 0-5, clock tick 0	R bits for pages 0-5, clock tick 1	R bits for pages 0-5, clock tick 2	R bits for pages 0-5, clock tick 3	R bits for pages 0-5, clock tick 4
	1 0 1 0 1 1	1 1 0 0 1 0	1 1 0 1 0 1	1 0 0 0 1 0	0 1 1 0 0 0
Page					
0	10000000	11000000	11100000	11110000	01111000
1	00000000	10000000	11000000	01100000	10110000
2	10000000	01000000	00100000	00010000	10001000
3	00000000	00000000	10000000	01000000	00100000
4	10000000	11000000	01100000	10110000	01011000
5	10000000	01000000	10100000	01010000	00101000
	(a)	(b)	(c)	(d)	(e)

LRU Approximation

- Aging is only an approximation of an actual LRU algorithm:
  - We don't get any information about how often something was referenced between two clock ticks
  - If our counter is N bits, our memory only extends back N clock ticks – so we can't distinguish how old things are past that point

Working Set

- Most processes don't reference pages randomly scattered around memory
- Instead, they have ***locality of reference*** – tend to reference only a small set of pages in a given time period
- We call the set of pages currently being used by a process its ***working set***
- If you don't have enough memory to hold the working set, you will constantly be swapping – known as ***thrashing***

Prepaging

- When we want to bring a process back in after swapping it in, we have the option of doing nothing
  - When the process runs it will just continually page fault until all pages in the working set are in memory
- Downside: each page fault requires some time to process – this is *slow*
- Instead we can try to load the process's working set all at once; this is called *prepaging*

Size of the Working Set

- The working set *w(k,t)* is more precisely defined as the number of pages referenced in the last *k* memory references at time *t*
- If the process never accessed the same page twice, we would have w(k,t) = k
- But because of reference of locality, w(k,t) stops increasing as k gets large

Working Set – Algorithm

- We can take advantage of the fact that the working set of a process is roughly a fixed size after some warmup period

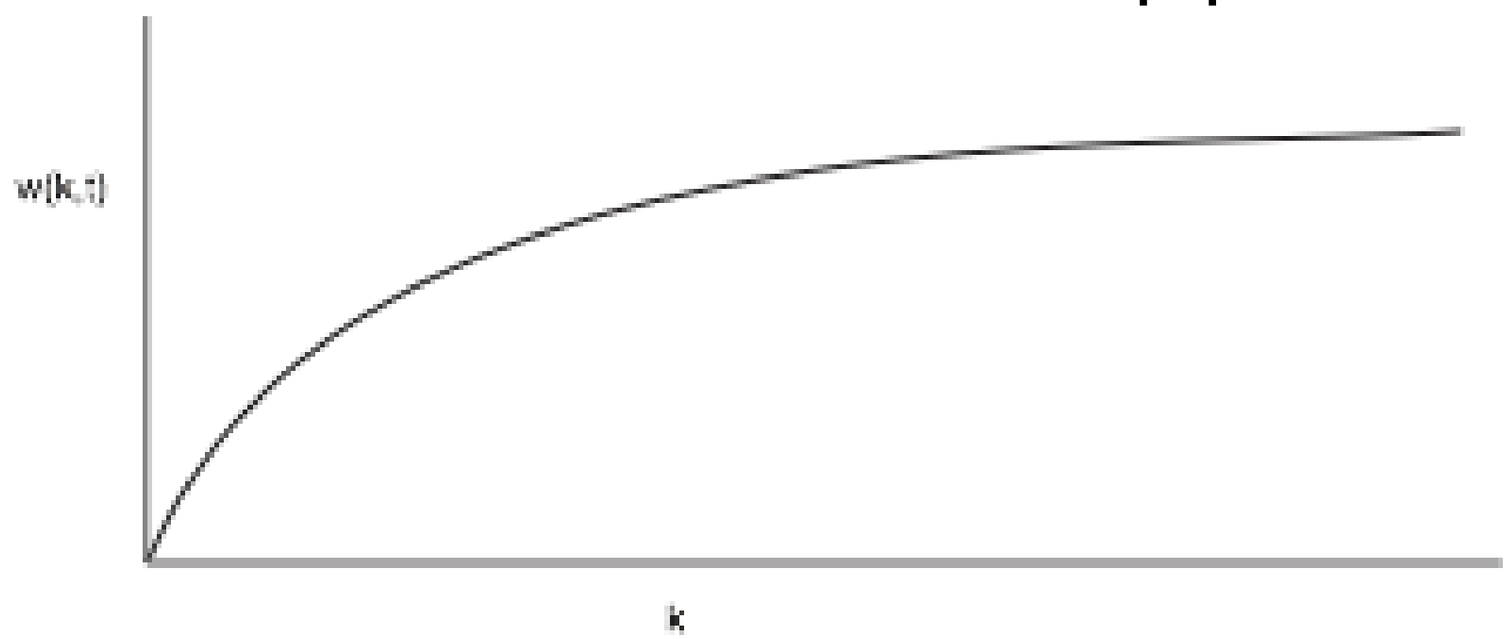

Tracking the Working Set

- For performance, we would like to load the exact working set into the process when it's paged back in
- In theory, we can just fix some value *k* and then track the pages touched in the last *k* memory references
- But once again, doing *anything* on every memory reference is very very slow

Approximating the Working Set

- As we saw with LRU, we may be able to make do with an *approximation* of the working set
- For example: pages referenced in the last τ ms
  - Note: only track time when the process is actually executing – its *current virtual time*
- Now we can take advantage of the CPU features that set the "referenced" bit automatically for us

Working Set – Algorithm

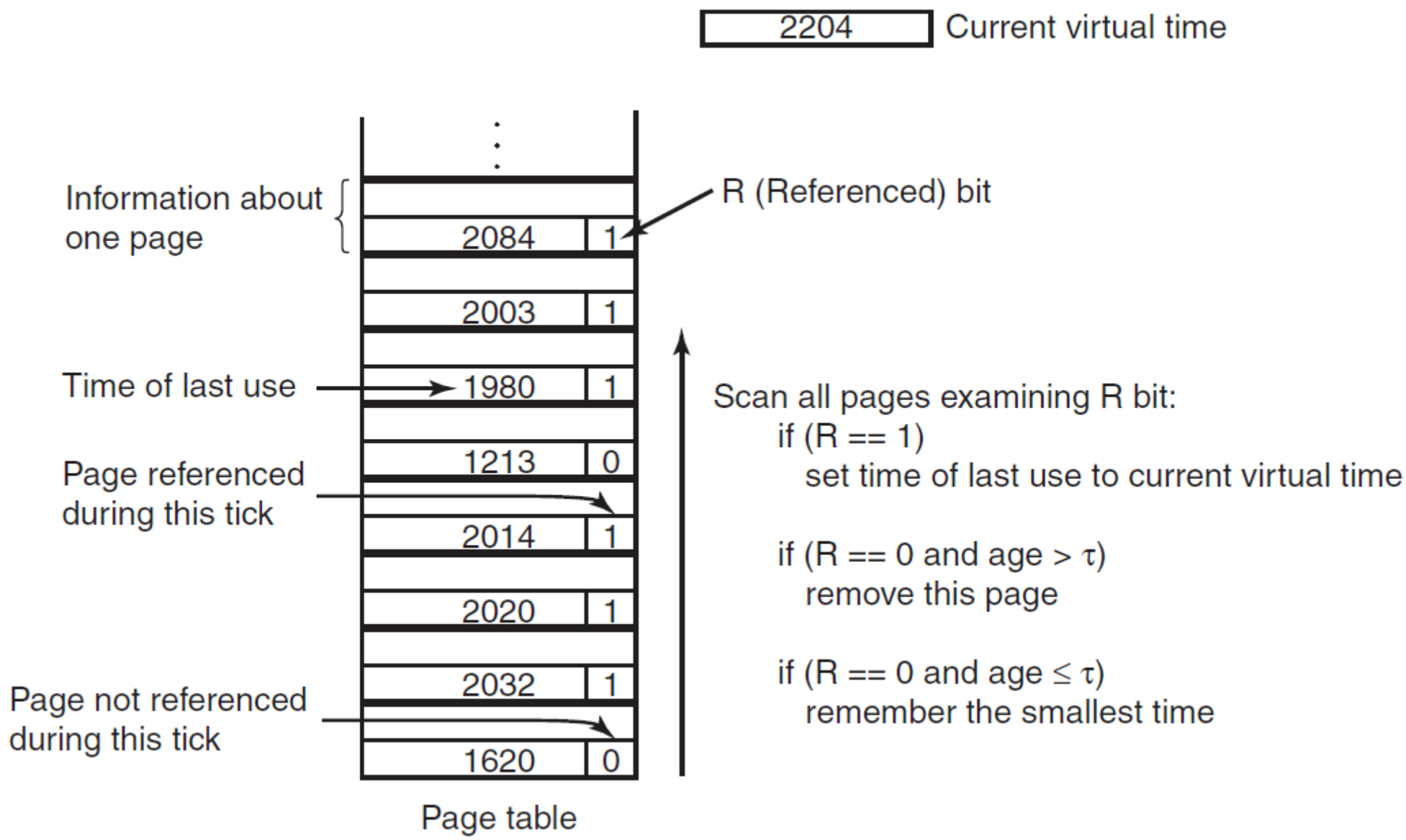

WSClock

- Working set algo is cumbersome since entire page table has to be scanned
- Enter WSClock

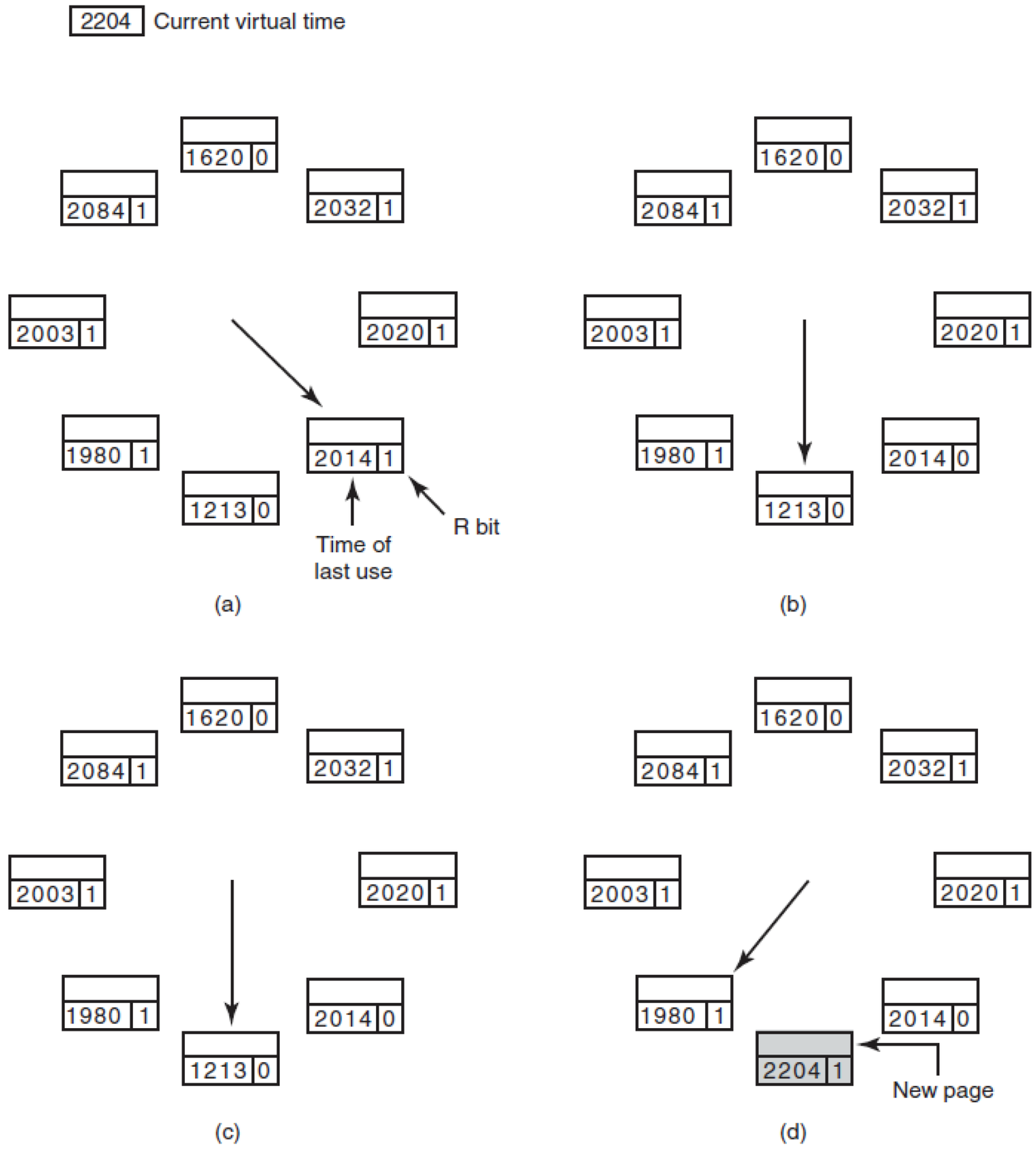

Figure 3-20. Operation of the WSClock algorithm. (a) and (b) give an example of what happens when $R = 1$. (c) and (d) give an example of $R = 0$.

Other Considerations

- Global vs local page replacement
  - When we run our replacement algorithm, does it look just at the pages in the current process, or at pages allocated to all processes?
- Load control
  - Sometimes we can't avoid thrashing
  - One possible solution – put some processes to sleep entirely, and hope that the working set of the remaining ones shrinks

- Virtual Memory
- Page Replacement Algorithms
- XV6 Implementation

Virtual Address Translation in xv6

- xv6 mostly uses 4KB pages (one page table per process, and one page table specifically for the scheduler)

- Early on in **boot**, it uses a var called entrypgdir, which creates 4MB mappings

entrypgdir

main.c

```
// Boot page table used in entry.S and entryother.S.
// Page directories (and page tables), must start on a page boundary,
// hence the "__aligned__" attribute.
// Use PTE_PS in page directory entry to enable 4Mbyte pages.
__attribute__((__aligned__(PGSIZE)))
pde_t entrypgdir[NPDENTRIES] = {
  // Map VA's [0, 4MB) to PA's [0, 4MB)
  [0] = (0) | PTE_P | PTE_W | PTE_PS,
  // Map VA's [KERNBASE, KERNBASE+4MB) to PA's [0, 4MB)
  [KERNBASE>>PDXSHIFT] = (0) | PTE_P | PTE_W | PTE_PS,
};
```

entry.S

```
# Set page directory
movl    $(V2P_WO(entrypgdir)), %eax
movl    %eax, %cr3
```

entrypgdir

main.c

```
// Boot page table used in entry.S and entryother.S.
// Page directories (and page tables), must start on a page boundary,
// hence the "__aligned__" attribute.
// Use PTE_PS in page directory entry to enable 4Mbyte pages.
__attribute__((__aligned__(PGSIZE)))
pde_t entrypgdir[NPDENTRIES] = {
  // Map VA's [0, 4MB) to PA's [0, 4MB)
  [0] = (0) | PTE_P | PTE_W | PTE_PS,
  // Map VA's [KERNBASE, KERNBASE+4MB) to PA's [0, 4MB)
  [KERNBASE>>PDXSHIFT] = (0) | PTE_P | PTE_W | PTE_PS,
};
```

0x80000000 >> 22 = 512

entry.S

```
# Set page directory
movl    $(V2P_WO(entrypgdir)), %eax
movl    %eax, %cr3
```

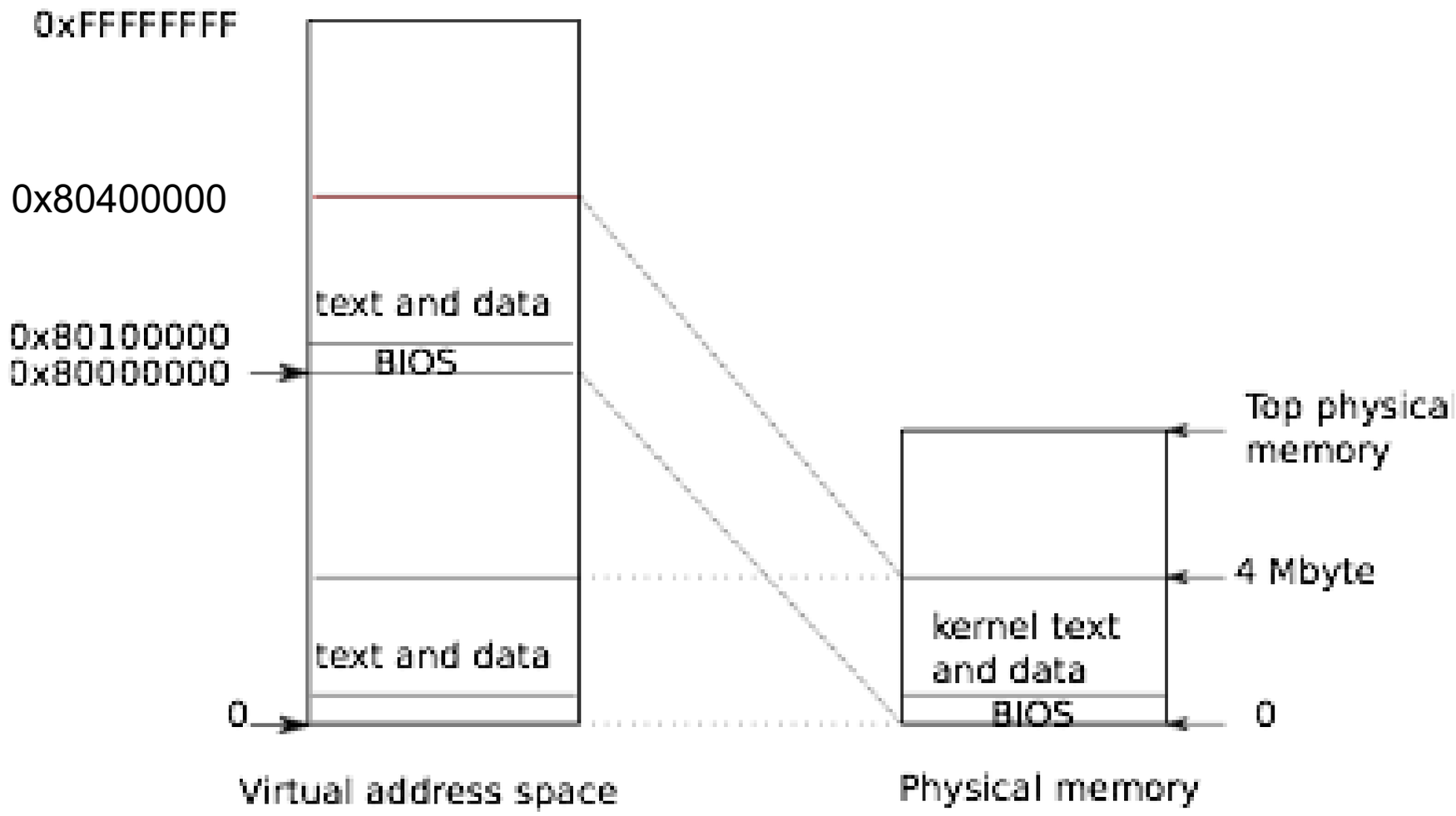
0xFFFFFFFF
0x80400000
text and data
0x80100000
0x80000000
BIOS
text and data
0
Virtual address space
Top physical memory
4 Mbyte
kernel text and data
BIOS
0
Physical memory

xv6 Process Page Tables

- **entrypgdir** suffices for allowing the the kernel's C code to start running. Once this is done xv6 sets up a more complicated page table
  - I/O space
  - Read-only space for kernel code and r/o data
  - Kernel writeable data & memory

kmap

```c
// Memory layout

#define EXTMEM  0x100000            // Start of extended memory
#define PHYSTOP 0xE000000           // Top physical memory
#define DEVSPACE 0xFE000000         // Other devices are at high addresses

// Key addresses for address space layout (see kmap in vm.c for layout)
#define KERNBASE 0x80000000         // First kernel virtual address
#define KERNLINK (KERNBASE+EXTMEM)  // Address where kernel is linked

```

```c
// This table defines the kernel's mappings, which are present in
// every process's page table. (vm.c)
static struct kmap {
  void *virt;
  uint phys_start;
  uint phys_end;
  int perm;
} kmap[] = {
 { (void*)KERNBASE, 0,             EXTMEM,    PTE_W},  // I/O space
 { (void*)KERNLINK, V2P(KERNLINK), V2P(data), 0},      // kern text+rodata
 { (void*)data,     V2P(data),     PHYSTOP,   PTE_W},  // kern data+memory
 { (void*)DEVSPACE, DEVSPACE,      0,         PTE_W},  // more devices
};
```

Implementing the Map

```
// Set up kernel part of a page table.
pde_t*
setupkvm(void)
{
  pde_t *pgdir;
  struct kmap *k;

  if((pgdir = (pde_t*)kalloc()) == 0)
    return 0;
  memset(pgdir, 0, PGSIZE);
  if (p2v(PHYSTOP) > (void*)DEVSPACE)
    panic("PHYSTOP too high");
  for(k = kmap; k < &kmap[NELEM(kmap)]; k++)
    if(mappages(pgdir, k->virt, k->phys_end - k->phys_start,
                (uint)k->phys_start, k->perm) < 0)
      return 0;
  return pgdir;
}
```

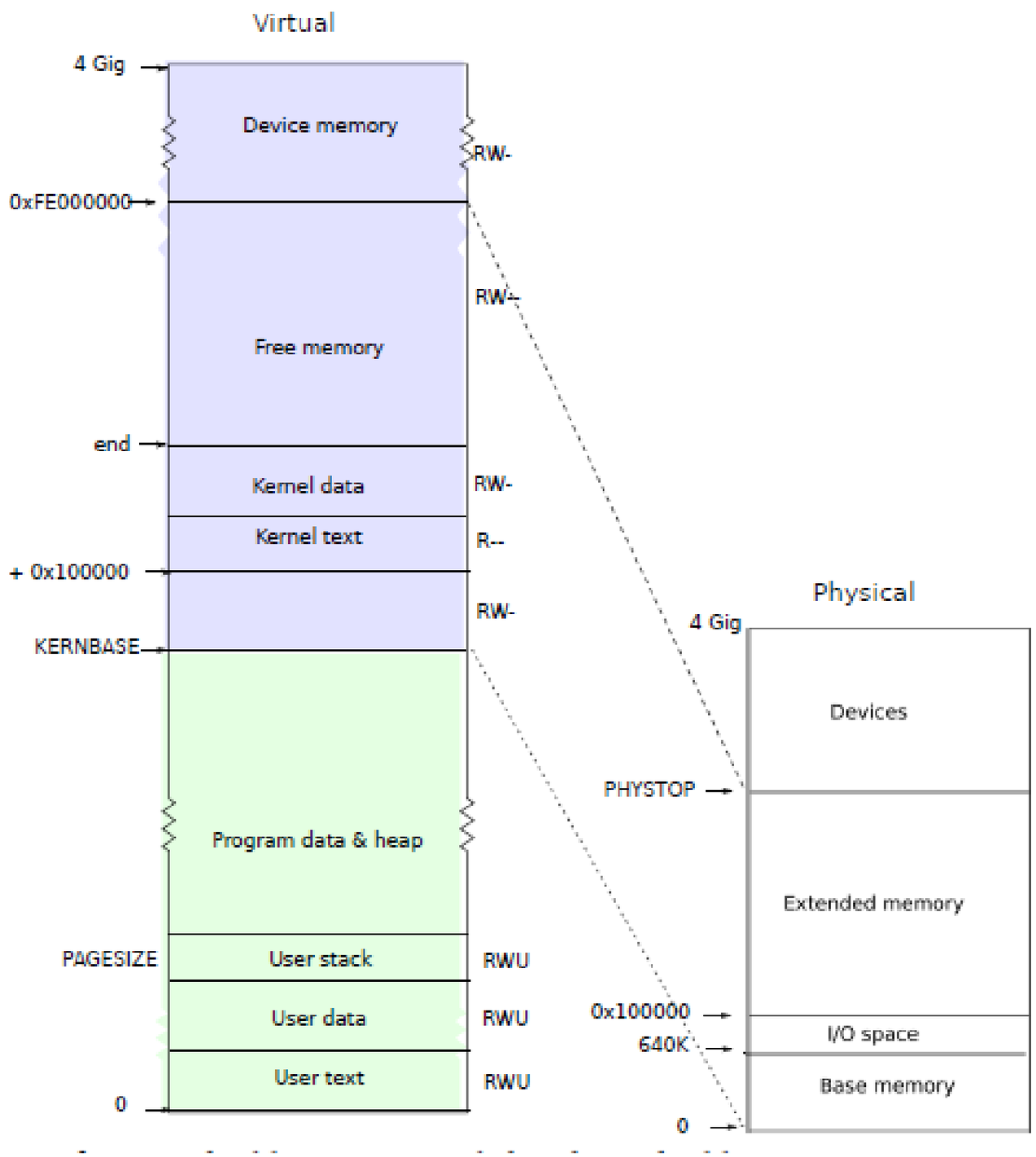
Virtual
4 Gig
Device memory
RW-
0xFE000000
RW-
Free memory
end
Kernel data
RW-
Kernel text
R--
+ 0x100000
RW-
KERNBASE
Program data & heap
PAGESIZE
User stack
RWU
User data
RWU
User text
RWU
0
Physical
4 Gig
Devices
PHYSTOP
Extended memory
0x100000
640K
I/O space
Base memory
0

Creating the First Process Address Space

Note: only 4096 bytes given to process to start with

```
// Load the initcode into address 0 of pgdir.
// sz must be less than a page.
// #define PGSIZE         4096
void
inituvm(pde_t *pgdir, char *init, uint sz)
{
  char *mem;

  if(sz >= PGSIZE)
    panic("inituvm: more than a page");
  mem = kalloc();
  memset(mem, 0, PGSIZE);
  mappages(pgdir, 0, PGSIZE, v2p(mem), PTE_W|PTE_U);
  memmove(mem, init, sz);
}
```

User-Space Layout

Layout set up in exec()

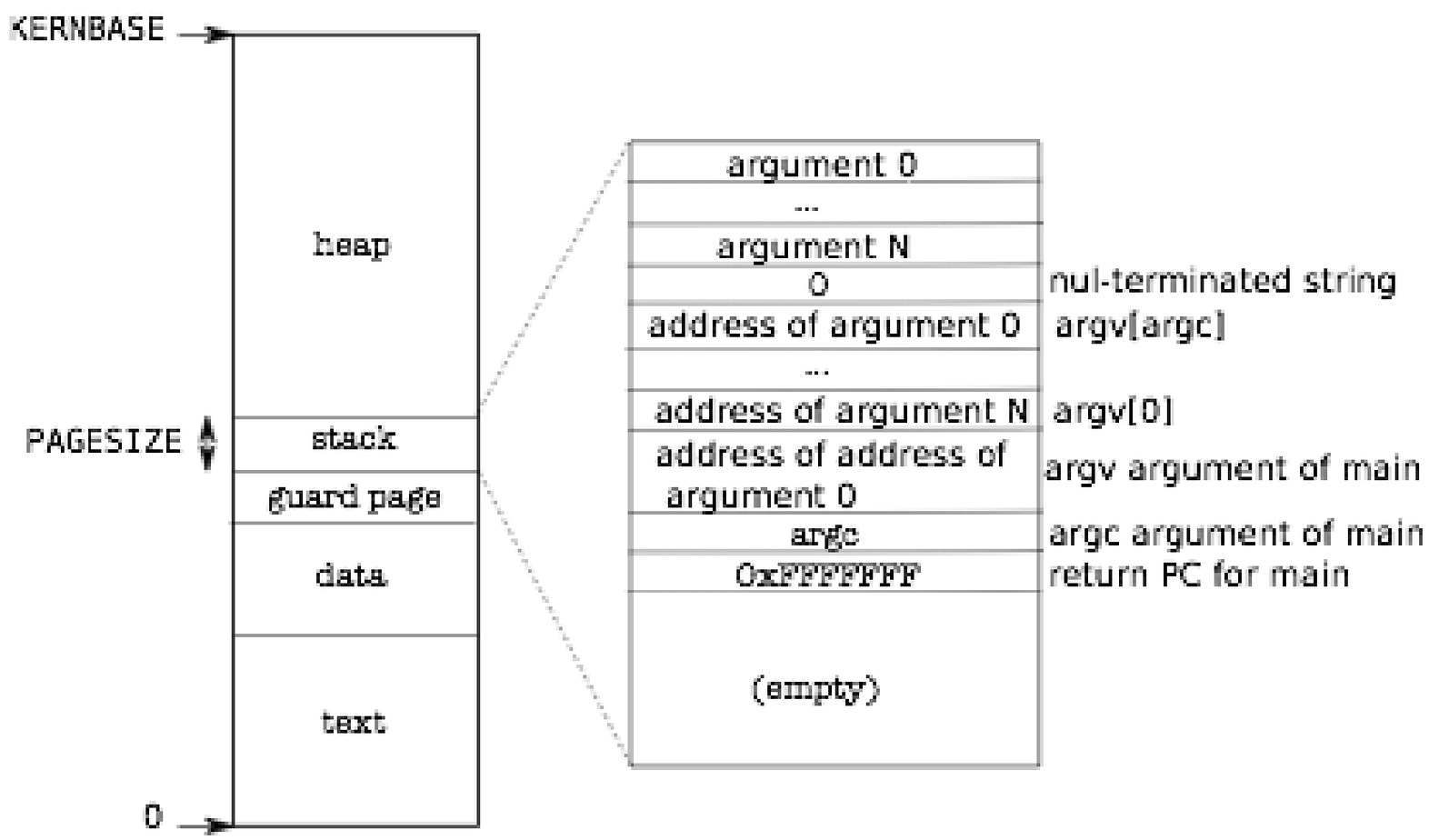

Guard Page

```
int
exec(char *path, char **argv)
{
[...]
  // Allocate two pages at the next page boundary.
  // Make the first inaccessible.  Use the second
  // as the user stack.
  sz = PGROUNDUP(sz);
  if((sz = allocuvm(pgdir, sz, sz + 2*PGSIZE)) == 0)
    goto bad;
  clearpteu(pgdir, (char*)(sz - 2*PGSIZE));
  sp = sz;
[...]
}
```

Other Features of xv6 Paging

- Kernel address space is actually shared by all processes
- The upper 2GB maps to the same physical pages.
- Don’t flush the TLB. System calls are much faster
- When you switch processes you switch CR3

Paging Tricks

- Having virtual address translation around lets us do lots of interesting things aside from basic process isolation

- We'll go through a few applications people have found that make use of the paging hardware

Paging Tricks: Self-reference

- Once we've put the processor into virtual address mode, we can only use virtual addresses
- We need to be able to read and write page tables by referencing them through virtual addresses
- Corollary: there must be a virtual address that maps back to the page directory itself

Paging Tricks: Self-reference

- There is! In xv6, 0x80000000 + PhysAddr = VirtAddr (for low kernel memory only)
- So if our page table is at physical address 0x3ff000, we can access it through 0x803ff000
- Page tables have to be set up with this mapping:

Mapping page table at VA 0x803ff000 PA 0x3ff000

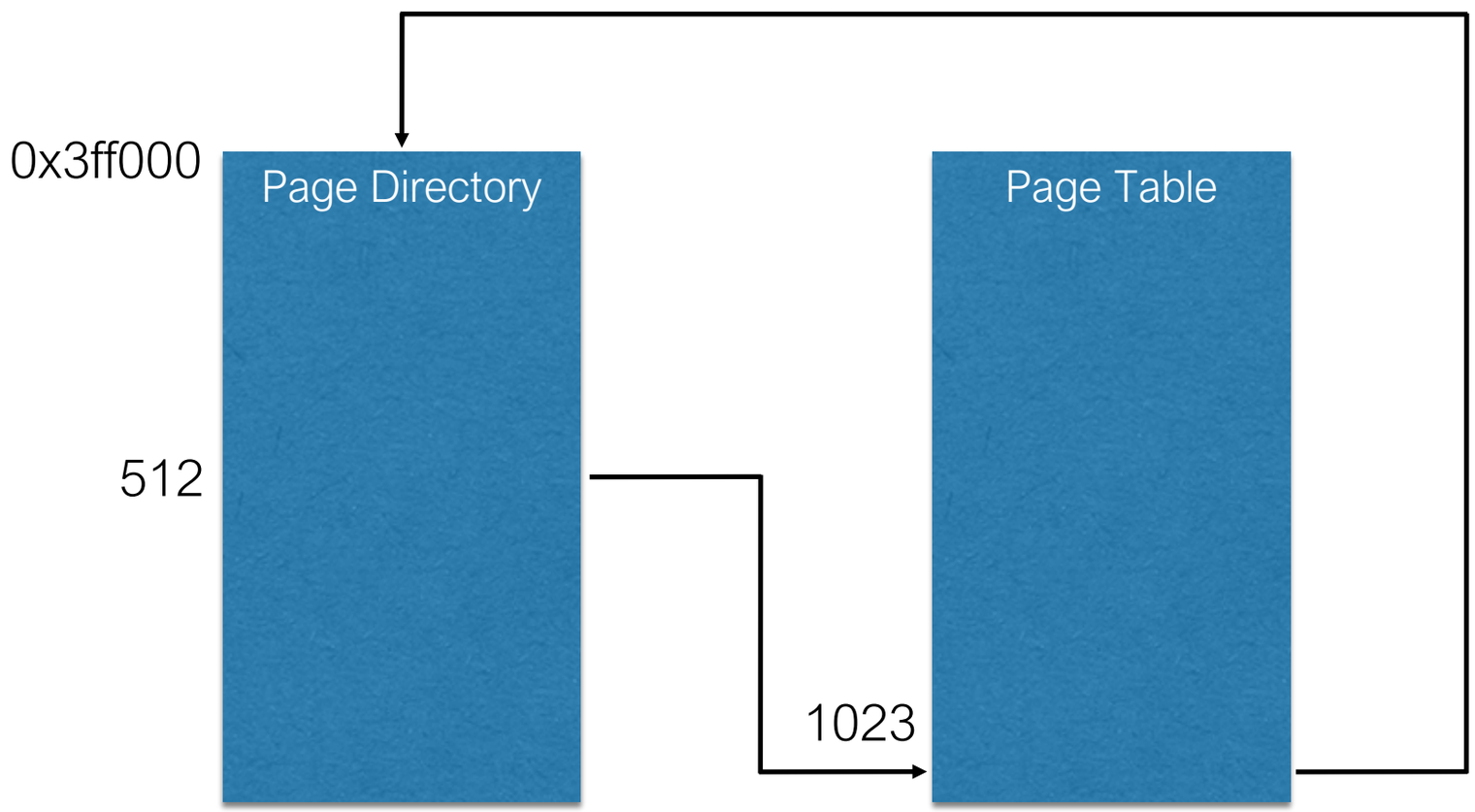

Paging Tricks: Shared Memory

- This one is pretty simple: just make virtual addresses of two processes point to the same physical memory

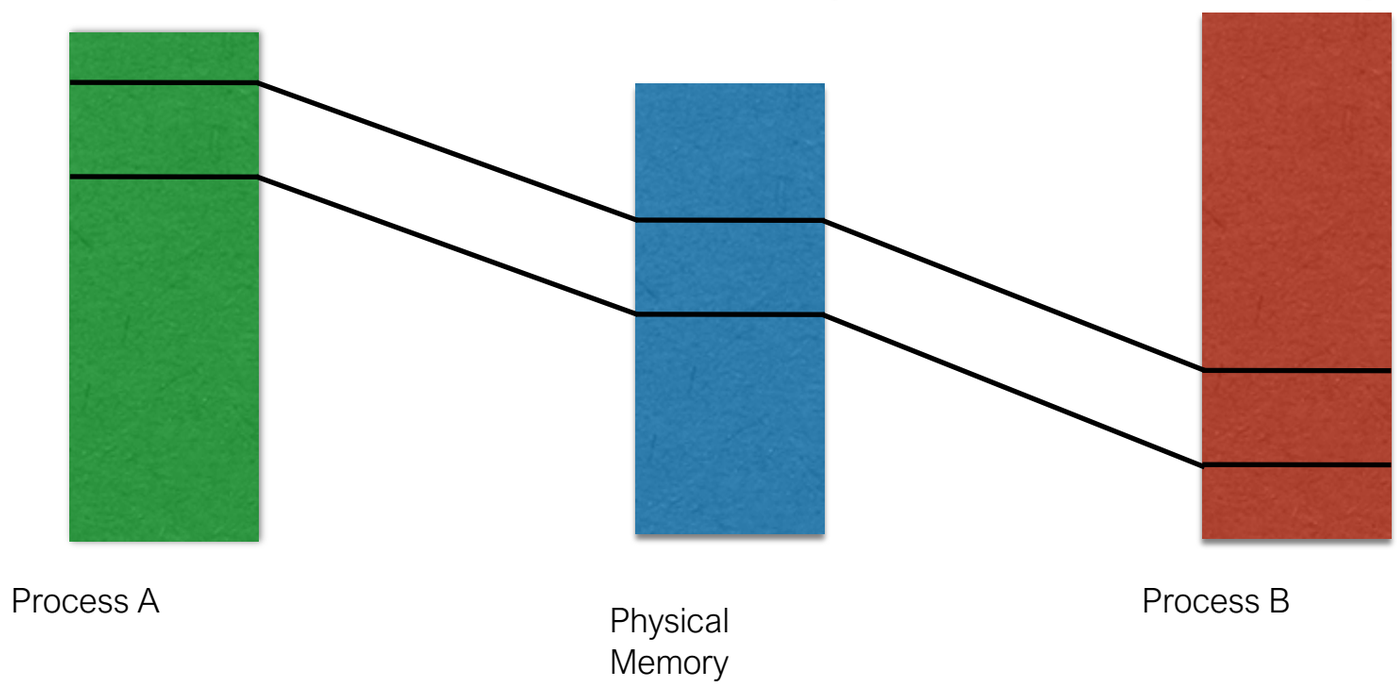

Paging Tricks: Copy-on-write

- In UNIX, fork() creates a complete copy of the memory of another process
- This is really inefficient – takes time to make the copy, wastes memory unless the new process makes changes

Paging Tricks: Copy-on-write

- Instead: set up new process's mappings so they point to the same pages as the old process
- But make the mapping read-only using page permissions.
- Now if the process tries to **write** to one of its pages,
  - Trap it to the kernel (via a page fault)
  - Make a real copy and then perform the write.

Paging Tricks: Memory-mapped files

- Normal way of reading a file: read() some data into a buffer, work on it, write() it back out
- Instead we might want to *map* a file into memory – virtual address X+N would refer to the Nth byte in the file
- We can again use paging for this – mark the pages corresponding to the file not present, then when someone tries to read them, read in from disk
- We can write back changes either immediately (by making pages write protected) or when the process exits

Paging Tricks: Lazy Memory Allocation

- Programmers are terrible people and sometimes allocate more memory than they really need
- Example:
  - allocating a large buffer for user input, then only using the very beginning
- We'd like to not give them any more than they are actually using

Paging Tricks: Lazy Memory Allocation

- Solution: make the system call that allocates memory essentially do nothing
  - But keep track of the fact that the process has allocated that virtual address range
- If the process actually tries to use the memory, we will get a page fault and can then allocate a page on demand
- If the pages are never touched, will never allocate

Paging Tricks: Lazy Memory Allocation

- Beware – we can end up handing out more memory than we actually have this way
- This is called *overcommitting*
- Linux actually does this intentionally – malloc() almost never fails
- But if you try to use all that memory, and the system runs out, the dreaded OOM-Killer will be invoked

Paging Tricks: Memory Breakpoints

- When using a debugger, we might want to watch all changes to a particular piece of memory
- E.g., to find out what code sets a global variable
- x86 has hardware support for triggering a debugger when memory is accessed
  - But it's limited to just 4 memory locations
  - No good for monitoring larger data structures, e.g.

Paging Tricks: Memory Breakpoints

- With a bit of help from the OS, we can do better
- Any time we set a memory breakpoint, mark the entire page non-present (or read-only for memory write breakpoints)
- Any access will trap into the OS, which can notify our debugger; when the debugger continues, the OS can finish handling the fault

For more details: *How to do a million watchpoints: Efficient Debugging using Dynamic Instrumentation,* Zhao et al.